GACIA

AICB Series Installation Devices

www.gacia.com.cn

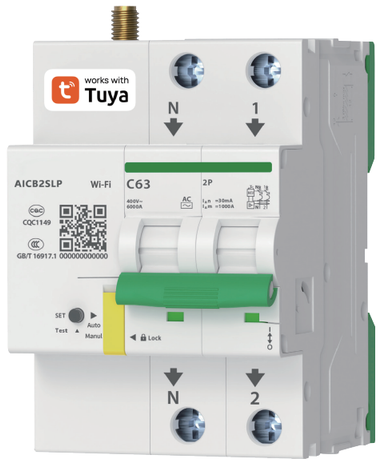

GACIA ELECTRICAL APPLIANCE CO., LTD.

GACIA

GACIA ELECTRICAL APPLIANCE CO., LTD.

No.1, Nanxijiang Road, Wenzhou Bridge Industrial Park, Beibaixiang Town,
Yueqing City, Zhejiang Province, China

Tel:86-577-62982555 Fax:86-577-62983555

E-mail:gacia@gacia.com.cn Http://www.gacia.com.cn

GACIA

Professional manufacturer of
Intelligent IoT circuit breaker



ISO9001 ISO14001 ISO45001 RoHS

Enterprise brief introduction

Gacia Electrical Appliance Co.,Ltd. was founded in 2002. For 20 years, it has devoted itself to the research and development, and manufacture of circuit breakers. The national export ranking of low-voltage circuit breakers is second only to Schneider and Chint. It is a key high-tech enterprise of the National Torch Program, a"specialized, refined and new" enterprise in Zhejiang Province. It has drafted and participated in the formulation/revision of a number of national or industry standards. as the vice chairman unit of the Low Voltage Branch of the dual-carbon economy, the company has formulated Under the guidance of digital transformation and Electrical Association.

a development strategy of "two new and two highs", focusing on the transformation to digital intelligently lelectrical appliances and high - low voltage DC protection appliances in the industry of new energy. The company has invested more than 60 million yuan in research and development funds to develop 5G IoT intelligent circuit breakers, orderly controllers for charging piles, high-voltage DC relays for new energy vehicles, rail transit communication and outdoor lightning protection high-voltage DC surge protection switches, digital chip AFDD fault arc protection switches and other series of "two new and two high" products .

In the past three years, the company has invested nearly 100 million yuan in capital to carry out technological transformation and smart factory construction in Wenzhou headquarters and Jiangxi export factory. Supported by PDM/ERP/MES/ WMS/QIS and other systems, with data analysis and visualization as decision-making analysis tools, through optimizing process paths, improving business processes, human-computer interaction and integrated applications, it has built a customized R&D to product shipment. The digital management system supported by the main line and 8 major business processes has reached the advanced intelligent manufacturing level in the industry, and realized the transformation and upgrading from traditional manufacturing to intelligent manufacturing. It is the first batch of smart factory demonstration companies in Yueqing City.



Product Overview

GACIA smart IoT circuit breaker incorporates the latest design concepts and manufacturing technologies, showcasing a compact size, extended lifespan, modular structure, high breaking capacity, intelligent control capabilities, and multiple protective features.

It is suitable for circuits operating at alternating current frequencies of 50Hz/60Hz, rated voltages ranging from 110V/ 230V and rated currents up to 100A in both domestic and international settings, where the breaker fulfills various functions including connection, disconnection, timing operations, delay mechanisms, as well as energy distribution tasks. It also ensures reliable protection for circuits and electrical equipment against leakage current occurrences, overloads or short circuits. Moreover, it can be utilized for infrequent motor starting while providing overload and short circuit protection. Most significantly, the product enables remote control over the opening/closing operation of the breaker while delivering real-time readings of electrical parameters such as voltage, current, and power consumption.It also offers diverse threshold protection settings to meet distinct user requirements.

Model definition

AICB 2 S L P -Zigbee/WiFi
1 2 3 4 5 6

1. smart circuit breaker
2. Design serial number
3. S: internal power supply
4. L: electric leakage
5. None: regular P: professional
6. Communication mode: Zigbee/WiFi optional.

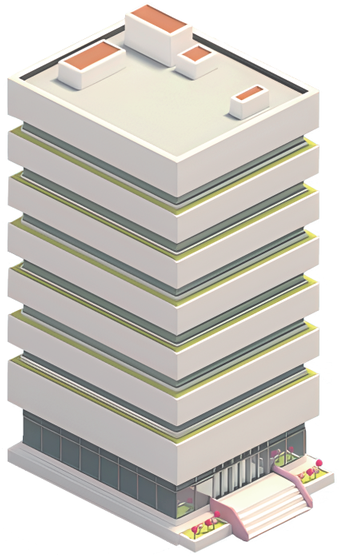

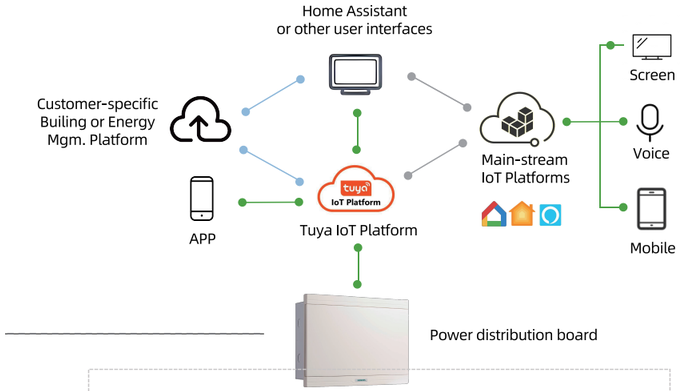

TECHNIK + works with Tuya =

Smart Circuit Breaker | IoT Platform | Smart electricity solutions

Highlights

Compact Size

The length of all products in this series measures 90mm.

Wide Voltage

The operating voltage is 110V/230V.

Leakage Self-check Function

It can be set to perform monthly scheduled leakage self-checks, actively monitoring to ensure product safety.

High Breaking Capacity

The short-circuit breaking capacity is up to 6kA.

High Precision

Power measurement with an accuracy level of 1 is supported.

Long Lifespan

The mechanical lifespan is 20,000 times and the eletrical one is 10,000 times.

Wiring Connection

Support connection from top or bottom.

Powerful Type A Leakage Protection

AC leakage protection + DC pulsating leakage protection

Remote/ Local

When conducting a local inspection of the circuit, maintenance personnel will raise the yellow padlock to activate the circuit breaker's local mode, thereby ensuring their safety by disabling remote control during this process.

Temperature Monitoring

The breaker supports monitoring of the temperature of the terminals and internal environment.

Function Explanation

Mode Switch

Automatic mode: In this mode, the product can be remotely operated for circuit opening and closing.
Manual mode: In this mode, the product cannot be remotely operated for circuit opening and closing; however, real-time electricity usage data can still be accessed. When the breaker is in a closed state and switched to manual mode, it will automatically open. If power supply needs to be restored, manual circuit closing is required.

Leakage Self-checking

The product integrates the leakage-check function into the light guide button. When the product is in the closed state, press and hold the button for five seconds, then release it to enter the leakage self-check mode. After instantly tripping and reclosing, it indicates that the leakage protection function is working properly.
The product supports manual operation of this monitoring button as well as remote periodic or non-periodic testing throughan APP. When performing remote self-checking using the APP, if the product is intact, it will automatically reclose after tripping, restoring normal power supply to the circuit.

Multi Functionality of
Smart Circuit Breaker

Traditional circuit breaker+time control switch+electric energy meter+ammeter+voltmeter+ transformer+temperature controller+remote controller+ Self resetting overvoltage and undervoltage protector+thermal relay+leakage protector+electrical fire monitoring system+.....

Safety Reliable Efficient



Integrate multiple functions

works with Tuya Smart Circuit Breaker GACIA

Conventional circuit breaker 	Time controlled switch 	Electric energy meter 	Ammeter 
Voltmeter 	Transformer 	Thermostat 	Remote control 
Self resetting overvoltage and undervoltage protector 	Thermal relay 	Leakage protector 	Electrical fire monitoring system 

Full power data highly integrated

High quality traditional circuit breaker | Precisely managed digital circuit breaker | Real time digital electricity meter

Energy consumption monitoring and management platform | Remote electric control system

Equipment health management platform | Electricity safety and electrical fire supervision platform

Selection Table of AICB Leakage Circuit Breaker

Residual current circuit breaker	AICB2SLP	AICB2SLP
		
Number of poles	2P	4P
Rated current In	6、10、16、20、25、32、40、50、63、80、100	6、10、16、20、25、32、40、50、63、80、100
Communication mode	Zigbee,Wi-Fi,4G	Zigbee,Wi-Fi,4G
Rated frequency f	50Hz/60Hz	50Hz/60Hz
Rated operating voltage Ue	AC110V/230V	AC190V/400V
Limit operating voltage	AC85V-264V	AC147V-450V
Rated insulation voltage Ui	500V	500V
Rated short-circuit breaking capacity Icn	6kA	6kA
Rated operating breaking capacity Ics	6kA	6kA
Instantaneous tripping type	B,C,D	B,C,D
Residual current type	A,AC	A,AC
Temperature rise of terminal connecting external wires	≤ 65K	≤ 65K
Mechanical life	10000	10000
Electrical life	10000	10000
Degree of protection	IP20	IP20
Torque of connecting screw	4N*m	4N*m
Automatic swtich on/off time	<1s	<1s
Power disipation	≤1.8W	≤1.8W
Wiring Connection	Connection:top or bottom	
	Customized neutral line on the left or on the right	
Installation and service conditions		
Altitude requirements	Installed below 2000m above sea level	
Ambient temperature	-25℃~ +70℃	
Environmental requirements	No explosion hazard, conductive dust, places that can corrode metal, damage insulation, and significanct vibration and impact	
Relative humidity	When the temperature is 40 ℃ , the relative humidity of the air shall not exceed 50%, and there can be a higher relative humidity at a lower temperature	
Installation type	Standard 35mm Din Rail	

Selection Table of AICB Miniature Circuit Breaker

Miniature circuit breaker	AICB2SP			
				
Number of poles	1P	2P	3P	4P
Rated current In	6、10、16、20、25、32、40、50、63、80、100	6、10、16、20、25、32、40、50、63、80、100	6、10、16、20、25、32、40、50、63、80、100	6、10、16、20、25、32、40、50、63、80、100
Communication mode	Zigbee,Wi-Fi,4G	Zigbee,Wi-Fi,4G	Zigbee,Wi-Fi,4G	Zigbee,Wi-Fi,4G
Rated frequency f	50Hz/60Hz	50Hz/60Hz	50Hz/60Hz	50Hz/60Hz
Rated operating voltage Ue	AC110V/230V	AC110V/230V	AC190V/400V	AC190V/400V
Limit operating voltage	AC85V-264V	AC85V-264V	AC147V-450V	AC147V-450V
Rated insulation voltage Ui	500V	500V	500V	500V
Rated short-circuit breaking capacity Icn	6kA	6kA	6kA	6kA
Rated operating breaking capacity Ics	6kA	6kA	6kA	6kA
Instantaneous tripping type	B,C,D	B,C,D	B,C,D	B,C,D
Temperature rise of terminal connecting external wires	≤ 65K	≤ 65K	≤ 65K	≤ 65K
Mechanical life	10000	10000	10000	10000
Electrical life	10000	10000	10000	10000
Degree of protection	IP20	IP20	IP20	IP20
Wiring screw torque	4N*m	4N*m	4N*m	4N*m
Automatic swtich on/off time	<1s	<1s	<1s	<1s
Power disipation	≤1.8W	≤1.8W	≤1.8W	≤1.8W
Wiring Connection	Connection:top or bottom			
	/	Customized neutral line on the left or on the right	/	Customized neutral line on the left or on the right
Installation and service conditions				
Altitude requirements	Installed below 2000m above sea level			
Ambient temperature	-25℃~ +70℃			
Environmental requirements	No explosion hazard, conductive dust, places that can corrode metal, damage insulation, and significanct vibration and impact			
Relative humidity	When the temperature is 40 ℃ , the relative humidity of the air shall not exceed 50%, and there can be a higher relative humidity at a lower temperature			
Installation type	Standard 35mm Din Rail			

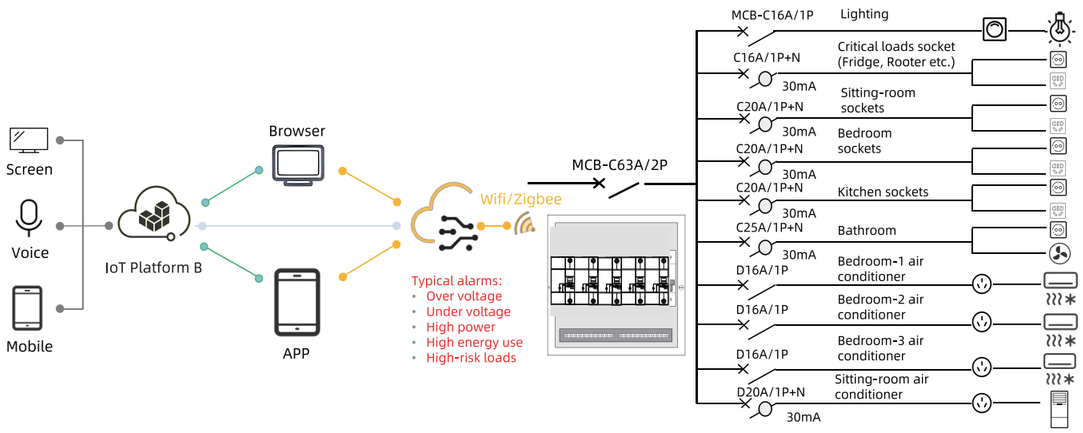

Conventional MCBs and RCDs provide electrical protection against overcurrent, short circuits, and electric shock.However, we believe that such equipments alone are insufficient to ensure the safety of both individuals and property in high-rise buildings where voltage fluctuations, abnormal temperatures, and other exceptional circumstances sometimes occur. In addition, prolonged operation of household appliances under abnormal voltage conditions can potentially reduce their lifespan. Our smart IoT circuit breaker not only provides alerts to you and property managers but also has the capability to disconnect power supply to malfunctioning household appliances. Moreover, an advanced smart IoT circuit breaker can collect load data from each branch in the distribution system and utilize big data analytics for energy-saving planning purposes.

Safety Warning

- Prohibited to use this product for any illegal activities. If any illegal activities occur as a result, the user will bear full legal responsibility.
- Prohibit children and unrelated individuals from playing with or operating mobile phones and remote control devices to avoid potential personal and property losses caused by accidental misuse.
- Prohibited to use the device in moving vehicles such as cars, to prevent accidents caused by vibration or accidental operation.
- Prohibited to install or disassemble products while they are energized to prevent risks such as electric shock to individuals and short circuits in equipment.
- Prohibited to use this product for maintenance isolation, in order to prevent potential personal injury caused by unauthorized personnel mistakenly operating the remote control device during maintenance.
- Strictly adhere to the wiring diagram during construction, ensuring the neutral and live wires are correctly connected; otherwise, it could lead to product malfunction or damage.
- Refrain from connecting low-quality electrical appliances to this product for control purposes, as it may cause accidental burning and property damage in case of power supply failure.
- Prohibited to perform remote closing,when a circuit breaker trips, until the line is inspected and faults eliminated. Unchecked closing may cause injury or damage.
- Prohibited to use this product in crucial facilities,given the issue of gateway signal channels, like fire control systems, boiler equipment, elevator devices, medical instruments, and emergency equipment. This is to prevent potential loss of control and subsequent harm to personal or property in case of accidental interruption or blockage of the signal channel.
- Using advanced features like delay and timed looping may result in slight time deviation.

Users are cautioned and assume full responsibility for any consequences arising from non-compliance with the above terms.