APF/SVG
User's Manual
V8.2

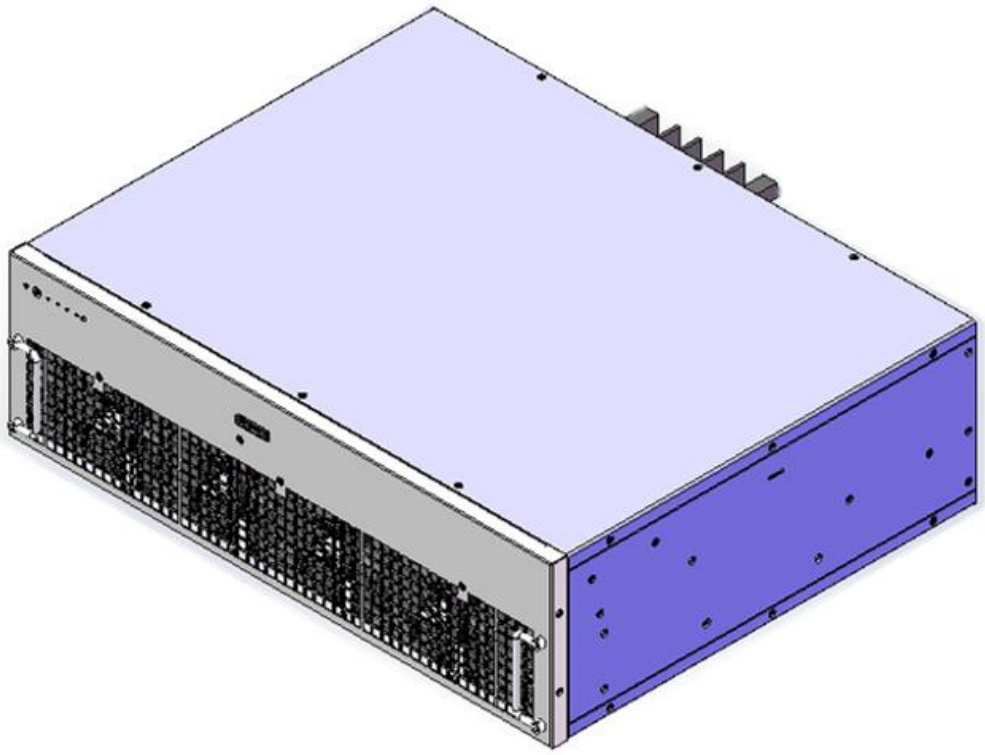

Revised on August 24, 2022

Foreword

First of all, thank you for purchasing the APF active filter or SVG static var generator product developed and produced by our company!

Our company is dedicated to solving power quality problems for users. The active filter/static var generator has comprehensive power quality management capabilities.SVG can compensate reactive power and low harmonics within 13 times; APF can filter out odd harmonics within 2-50 times at the same time, the filtering capacity can be up to 97%, and the complete compensation time for step change harmonics is less than 20ms. .APF/SVG can be operated in parallel at the same time. The efficiency of the whole machine is greater than 97.5%. It is fully applicable to various situations in industrial and civil fields. It is the best solution for nonlinear load harmonic control and reactive power compensation.

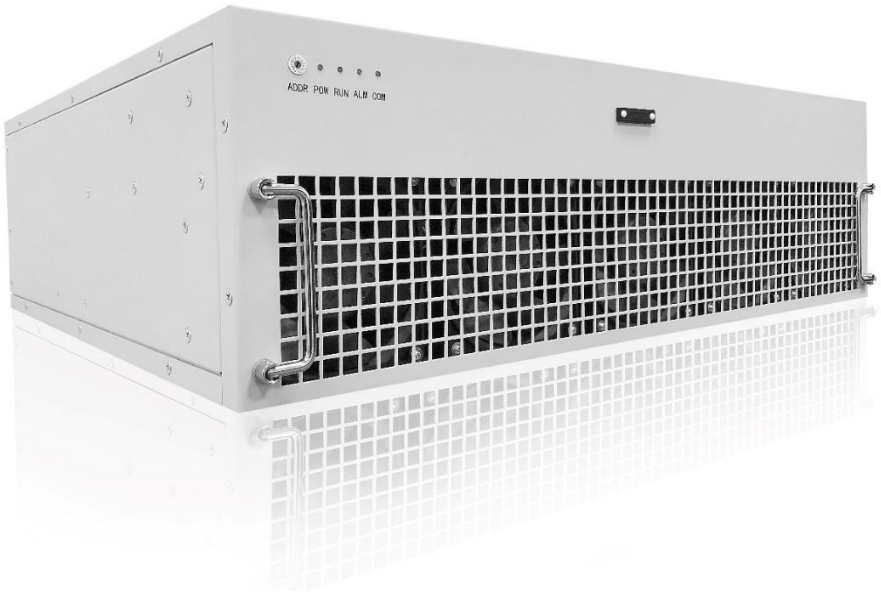

Appearance Image of Product

Introduction

❑ Product Principle

1） Functional Principle

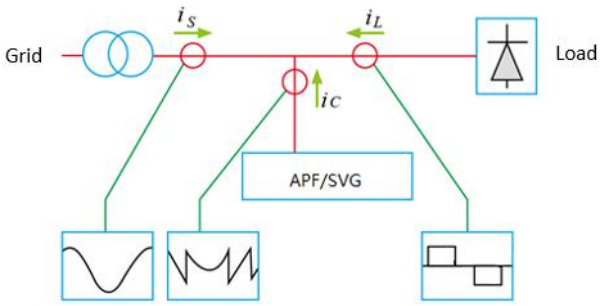

Schematic Diagram of APF/SVG Compensation

The user can set the parameters so that the device can simultaneously filter out harmonics, dynamically compensate reactive power, compensate for three-phase unbalance, and compensate for voltage drop,etc.

APF/SVG Functional Principle

Principle Name	Principle Description
Principle of filtering out harmonic	APF/SVG acquires the current signal in real time through an external current transformer, and separates the harmonic part through the internal detection circuit, and generates a compensation current with the opposite phase of the harmonics in the system through the IGBT power converter to realize the function of filtering out harmonic. The output compensation current of APF/SVG varies accurately according to the dynamic harmonics of the system, so there will be no compensation problem. In addition, APF/SVG has overload protection function. When the harmonic of the system is larger than the filter capacity, the device can automatically limit the output of 100% rated capacity without overload.
Principle of compensating for reactive power	According to the reactive power of the system, APF/SVG generates capacitive or inductive fundamental current through the IGBT power converter to achieve the purpose of dynamic reactive power compensation. The compensation target value can be set through the operation panel without overcompensation. The compensation is smooth and there is no inrush current impact on the load and the grid.
Principle of compensating for three-phase unbalance	The APF/SVG extracts the unbalanced component according to the system current, and the three phases emit a current of the same phase as the unbalanced component, and the unbalanced portion is compensated to zero, so that the three-phase unbalanced current can be corrected to the three-phase balanced

	current.

2） Control Principle

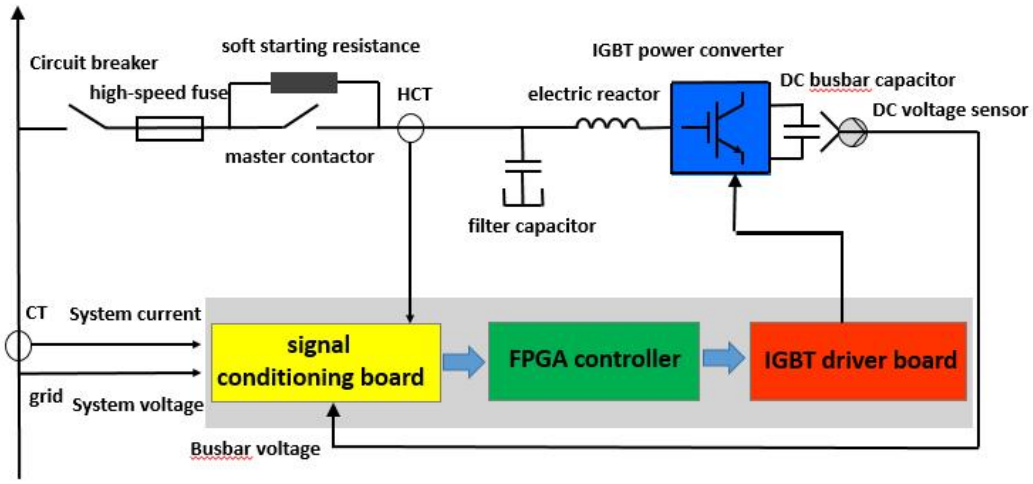

Schematic Diagram of APF/SVG Internal Control

After the circuit breaker is closed, in order to prevent the instantaneous impact of the grid on the DC bus capacitors during power-on, the APF/SVG firstly charges the DC bus capacitor through the soft-start resistor.When the bus voltage Udc reaches a predetermined value, the main contactor is closed.As a energy storage device, the DC capacitor supplies energy to the external output of the compensation current through the IGBT inverter and the internal reactor.The APF/SVG sends the current signal through the external CT to the signal conditioning circuit and then to the controller.The controller decomposes the sampling current, extracts each harmonic current, reactive current, and three-phase unbalanced current, and compares the collected current component to be compensated with the compensation current that has been sent by APF/SVG to obtain a difference. The real-time compensation signal is output to the driving circuit, and the IGBT converter is triggered to inject the compensation current into the power grid to realize closed-loop control and complete the compensation function.

❑ Product Features

1) Modular design, any module failure will not affect the normal operation of other modules, greatly improving the reliability of the whole equipment; can achieve smooth expansion of multiple direct parallel operation.The master-slave control mode is used when multiple units are expanded; when multiple modules are connected in parallel, all modules can share a set of current transformers;

2) The odd-order harmonic currents of 2 to 50 times or less can be filtered out at the same time, and the harmonics of the 13 types of filtering can be set as needed.When the load current distortion rate is >20%, not less than 85%; when the load current distortion rate is <20%, not less than 75%; reactive power compensation can make the power factor reach 1; the three-phase

current unbalance can be corrected to complete balance;

3) Use the fifth generation IGBT of imported international well-known brand, it can automatically adjust the output according to the harmonic current of the load, and dynamically filter;

4) Use the American Xilinx military-grade FPGA control chip, which has fast running speed and high reliability;

5)With a layered design, dust and rain will not adhere to the circuit board, adapting to the use under harsh conditions;

6) Filtering, compensating reactive power, compensating for three-phase unbalance can be single-selected or multi-selected, and can set the priority of functions;

7) Use the iterative DFT detection algorithm of sliding window , the calculation speed is fast, the transient response time is less than 0.1ms, and the full response time of device compensation is less than 20ms;

8) The output filtering uses the LCL structure to connect to the grid, and its own high-frequency carrier does not feed back to the grid, and there is no interference to other devices in the power distribution system;

9) Complete protection functions, including over-voltage, over-current, over-heat, short-circuit and other complete protection functions, as well as system self-diagnosis function;

10) It has a soft start control loop to avoid excessive inrush current at the moment of starting, and limits the current between the rated ranges;

11)Use the reliable current limiting control link. When the current to be compensated in the system is greater than the rated capacity of the device, the device can automatically limit the output to 100% capacity, maintain normal operation, and no faults such as overload burning;

12) The main circuit uses a three-level topology, and the output waveform has high quality and low switching loss;

13) The wall mounted module comes with a 4.3 touch screen for parameter setting, parameter viewing, status viewing, event viewing and more.It can also be centrally monitored by high-definition 7-inch touch screen, which is easy to operate. The screen displays the system and device operating parameters in real time, and has a fault alarm function.

14) Save space for users, the maximum power of 600mm wide cabinet is 300A/200kvar, and the power of 800mm wide cabinet can reach 750A/500kvar.

❑ Unpacking inspection

When unpacking, please confirm carefully:

Attention	☑ The capacity on the nameplate of the complete cabinet unit, the capacity and model on the module label are the same as your order. ☑ The box contains **the user manual, product certificate, and factory inspection report.** ☑ If the order contains a centralized monitoring touch screen, it is usually packaged separately.The package contains **7-inch touch screen, touch screen related mounting accessories, communication line for touch screen connection module, equipment engineering drawings, and module terminal insulation cover.** ☑ Whether there is any damage during there-transportation of the product; if there is any missing or damage, please contact the company to solve the problem.

■ **Module package content:**

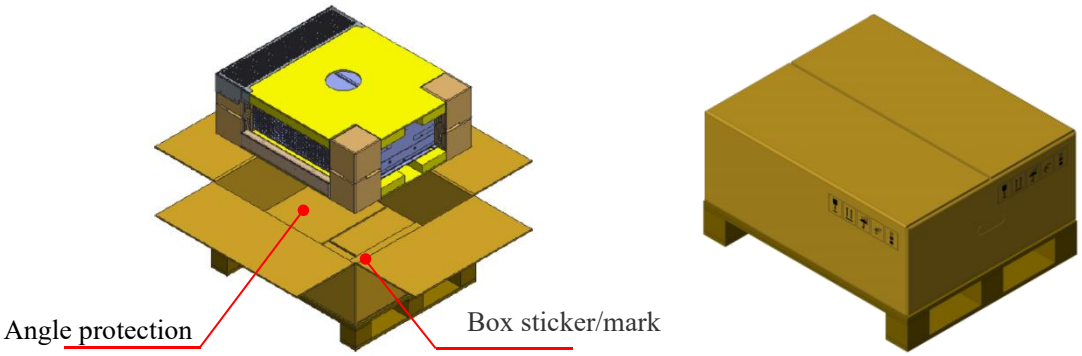

Image of packaging box

NOTE

● The module is packed in cartons and has passed the ISTA-3A drop test.

■ **Accessories package content:**



Touch screen packaging



Touch screen mounting parts and terminals



Touch screen communication interface port conversion module



Communication line packaging



Module primary terminal insulation cover



Engineering drawings

❑ Initial Use

Users who are using this product for the first time should read this manual carefully.If you still have questions about the function and installation of the product, please consult our technical staff for help, which is beneficial to the correct use of this product.

Contents

Foreword *1*

Introduction *2*

❑ **Product Principle** **2**

❑ **Product Features** **3**

❑ **Unpacking inspection** **4**

❑ **Initial Use** **6**

Contents *7*

About the Manual *9*

Safety Instructions *10*

❑ **Safety Signs** **10**

❑ **Safety Precautions** **10**

❑ **Special purpose** **13**

Chapter One Product Information *15*

1.1 Instructions of Product Appearance **15**

1.2 Instructions of Wiring Terminals **23**

1.3 Description of dial switch and status indicator **25**

1.4 Product Size **26**

Chapter Two System Connection *32*

2.1 Diagram of System Connection **32**

2.2 System Composition and Accessories Selection **34**

Chapter Three Installation and Wiring *39*

3.1 Installation Precautions **39**

3.1.1 Installation Environment 39

3.1.2 Installation Space and Direction 40

3.2 Installation Guide **42**

3.2.1 Installation of cabinet type 42

3.2.2 Wall-mounted installation 47

3.3 Wiring **48**

3.3.1 Primary wiring 48

3.3.2 Wiring of centralized monitoring touch screen 51

3.3.3 CT Wiring 52

3.3.4 Wiring of emergency stop switch 56
3.3.5 Wiring of status indicator 57
Chapter Four Operation Guide of ON/OFF Machine 59
4.1 Start-up Procedures 59
4.1.1 Check the wiring 59
4.1.2 Check the communication 59
4.1.3 Check the parameters 59
4.2 Shutdown Procedure 60
4.3 Automatic Start-up 60
Chapter Five Operation Guide of Large Screen 62
5.1 Main Menu 62
5.2 System parameter 63
5.3 login interface 64
5.4 Set interface 65
5.5 Bar chart interface 69
5.6 Waveform interface 69
5.7 History Alarm 70
5.8 Warnning 70
5.9 Set-TSC 71
Chapter Six Operation Guide of Small Screen 74
6.1 Parameter interface 74
6.2 Setting interface 77
6.3 Status Interface 78
6.4 TSC parameter setting and alarm interface 79
Chapter Seven Repair and Maintenance 82
Schedule 1 Technical Specification Table 83
Schedule 2 APF/SVG Parameter setting table 85
Schedule 3 APF/SVG Fault status table 87
Schedule 4 Parameter setting and fault information table of TSC 89

About the Manual

Thank you for purchasing our APF active filter/SVG static var generator product.This manual describes how to use this product correctly.Please read this manual carefully before using (installation, wiring, operation, maintenance, inspection).In addition, please use this product after understanding the safety precautions of the product.

<table>
<tr><td rowspan="3">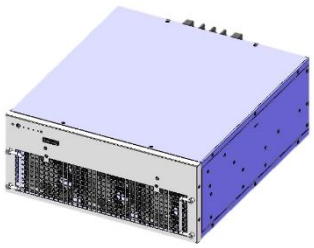</td><td>● This manual is shipped with the product.
● This manual applies to APF 150A,100A, 75A, 50A,35A and SVG 100kvar, 50kvar, 30kvar.
● Anyway this manual also applies to APF 690V 100A and SVG 690V 100kvar.</td></tr>
<tr><td>● This manual introduces the functional features and use method of APF/SVG, including product selection, parameter setting, operation and commissioning, maintenance and inspection, etc. Please read this manual carefully before use. Equipment manufacturers should send this instruction to the end user with the equipment for the convenience of subsequent use</td></tr>
<tr><td>● The illustrations in this manual are only for the purpose of illustrating the installation and use of the products, which may be different from the products you ordered.
● The company is committed to continuous improvement of products and continuous upgrading of product functions. The information provided is subject to change without notice.
● If you have any problems in use, please contact our regional dealer or directly contact our sales and technical staff.</td></tr>
</table>

Safety Instructions

❑ Safety Signs

In this manual, there are three types of safety levels:

Table 1-1 Use of symbols, terms and names

	Notes
 **Attention**	Failure to follow the instructions of the manual may result in damage or damage to the equipment!
 **Warning**	Failure to follow the instructions of the manual may result in equipment damage and personnel injuries!
 **Danger**	Failure to follow the instructions of the manual may result in serious accidents and serious personnel injury or death!!!

The use of these three types of markings in this manual indicates that it is an important part of safety.Failure to follow these precautions may result in economic loss, resulting in minor or serious injury or death, damage to the product, damage to supporting devices and parts as well as cabinets.In addition, the company will not be responsible for any damage or equipment damage caused by your company or your company's customers who fail to comply with the contents of this manual.

❑ Safety Precautions

Before installation	
 **Danger**	● Do not install if you find water in the box or water in the equipment, missing parts or obvious damage to the parts when unpacking! ● If the packing list does not match the physical name and the ordered equipment name, please do not install it!

 **Attention**	● When handling the module, be sure to hold the case tightly.If it is dropped during handling, there is a risk of injury and equipment damage. ● It should be lifted and handled gently when carrying it, otherwise there is danger of damage to the equipment! ● Do not use damaged or missing modules, there is a risk of injury! ● The equipment has been tested for withstand voltage before leaving the factory. It has not been confirmed by the company's technicians, and no voltage withstand test can be performed on any part of the equipment.And high voltage may cause damage to equipment insulation and internal components.

During installation	
 **Danger**	● Non-electrical construction professionals should not install, maintain, inspect, or replace parts.Otherwise there is a danger of electric shock! ● It is strictly forbidden to tear the tear-proof label of the equipment and cause damage, which is not within the scope of the company's responsibility and warranty. ● In the retrofit project, when installing the cable once and the current sampling secondary line, ensure that the access system is powered off and safe operation in the surrounding area.There is a risk of electric shock, which may result in personal injury or death!
 **Attention**	● Please handle the module with care when installing, and be careful not to bump the module, especially the touch panel on the front panel of the module.If it causes damage, it is not within the scope of the company's responsibility and warranty. ● When two or more modules are placed in the same cabinet, please pay attention to the installation position to ensure the heat dissipation effect.It is recommended to increase the heat dissipation measures such as fans. ● The module should be installed in a position to ensure ventilation. Do not cover the module's own cooling fan inlet and outlet. ● The installation position of the module should ensure the safe commissioning and maintenance of the after-sales personnel. ● The installation of the wall-mounted module should be as close as possible to the position where the personnel move less, and the safety hazard sign should be made in an obvious position.

During power-on operation	
 **Danger**	● Do not open the cover after powering on.Otherwise there is a danger of electric shock, resulting in casualties! ● It is strictly forbidden to install and wire the equipment with electricity! ● Do not touch any of the primary and secondary terminals of the module.Otherwise there is a risk of electric shock, resulting in casualties! ● This equipment requires the company's designated after-sales engineers to carry out commissioning, other personnel operations must be carried out under the guidance of the company's after-sales engineers, prohibiting private operation! Otherwise it may cause equipment damage, and even cause casualties!
 **Attention**	● When equipment is running, do not arbitrarily change the factory parameters of the equipment.Failure to do so may result in damage to the equipment! ● When the equipment is running, you should avoid something falling into the equipment.Failure to do so may result in equipment damage! ● After the equipment is powered on, you should avoid frequently starting or stopping the equipment or frequently switching the upper switch of the device. ● During commissioning, if the equipment has abnormal noise or fault information, it should be powered off in time and contact our technical staff.

During repair and maintenance	
 **Danger**	● Personnel without professional training should not perform repairs and maintenance on the equipment.Failure to do so may result in personal injury or equipment damage! ● Do not repair or maintain the equipment with electricity.Otherwise there is danger of electric shock! ● After confirming that the input power of the equipment is powered off for at least 10 minutes, the equipment can be maintained and repaired.Otherwise the residual charge on the capacitor will cause personal injury! ● Before performing maintenance work on the equipment, make sure that the equipment is securely disconnected from all power sources. ● The parameters must be set and checked after the equipment is replaced. ● Do not power on the equipment that has reported fault or damaged equipment, otherwise it will increase the damage of the equipment.

❑ Special purpose

 **Attention**	● Attention should be paid to whether there are reactive power compensation equipment consisting of passive equipment such as capacitor reactance in the same system. If they are not properly set up, the active filter/static var generator may conflict with these passive compensation devices or fail to give full play to their compensation capabilities. ● When APF/SVG is used for harmonic compensation, it is necessary to ensure that there is no pure capacitance compensation equipment or capacitive load equipment in the system. If necessary, it must take necessary measures (such as series reactor) to make the harmonics of the required compensation times. The wave is inductive and avoids resonance. Otherwise, there is a risk of APF/SVG fault damage or damage to pure capacitance compensation equipment and capacitive load equipment; ● The APF/SVG output contains harmonic components, which may interfere with the communication equipment nearby. It is necessary to keep the communication and control transmission signal lines away from the APF/SVG primary circuit. If necessary, an anti-interference EMI filter can be installed to reduce the interference. ● The altitude is no more than 1000 meters.If it exceeds 1000 meters, the equipment will be derated by 1% for every 100 meters.

Chapter One Product Information

1.1 Instruction of Product Appearance……15
1.2 Instruction of Wiring Terminals……22
1.3 Description of Dial Switch and Status Indicator…… …25
1.4 Product Size……26

Chapter One Product Information

1.1 Instructions of Product Appearance

- **150kvar / 200A module: rack mounted**

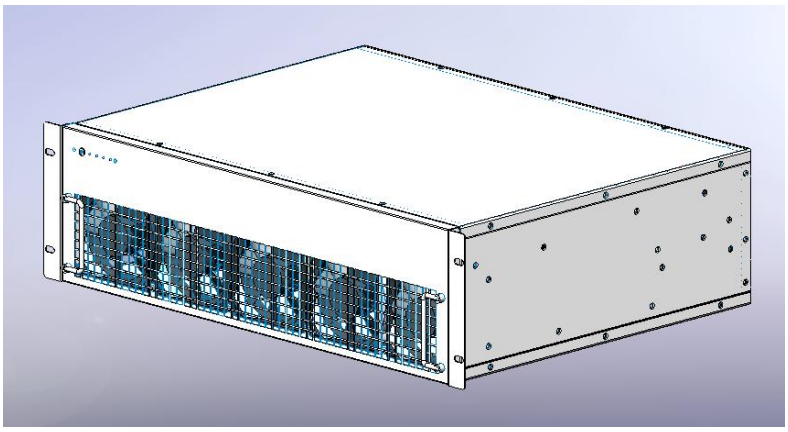

Figure 1-1 Appearance of 150kvar / 200A rack module

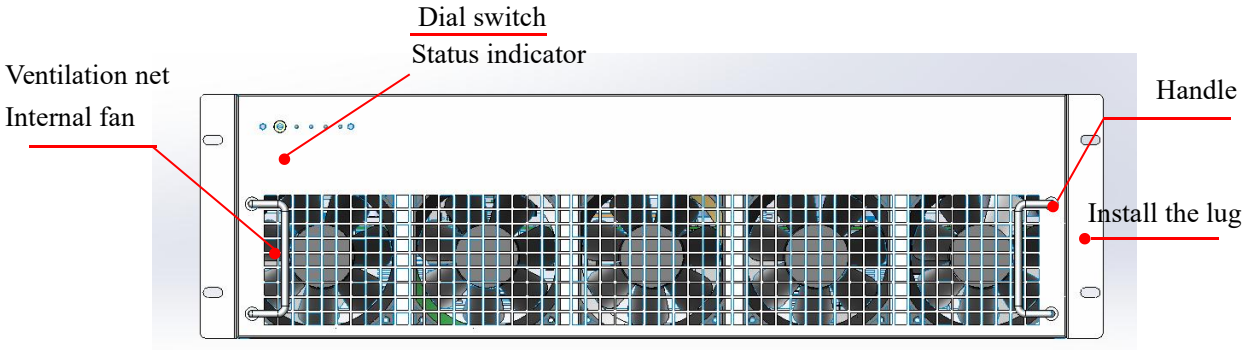

Figure 1-2 Front of 150kvar / 200A rack type module

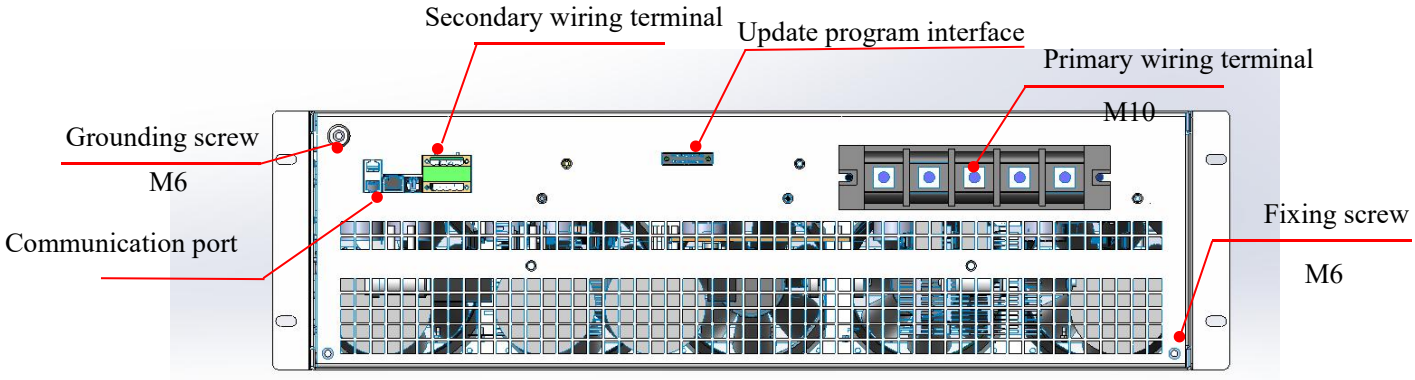

Figure 1-3 Back of 150kvar / 200A rack mounted module

■ **100kvar /150A/100A module: rack mounted**

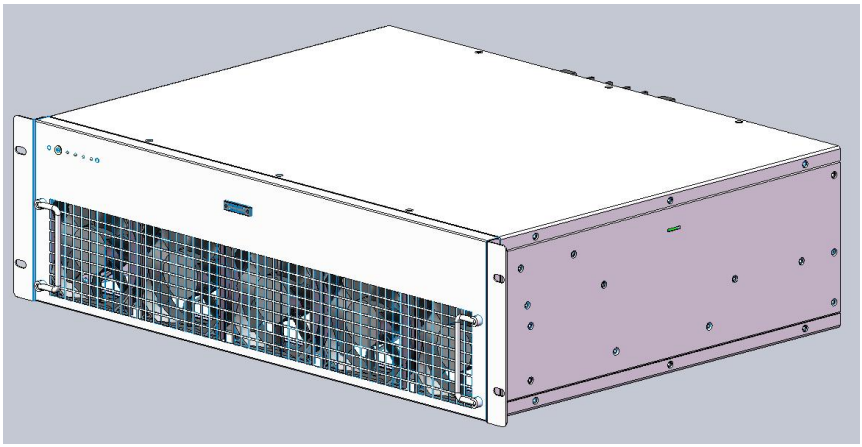

Figure 1-4 Appearance of 100kvar / 150A / 100A rack mounted module

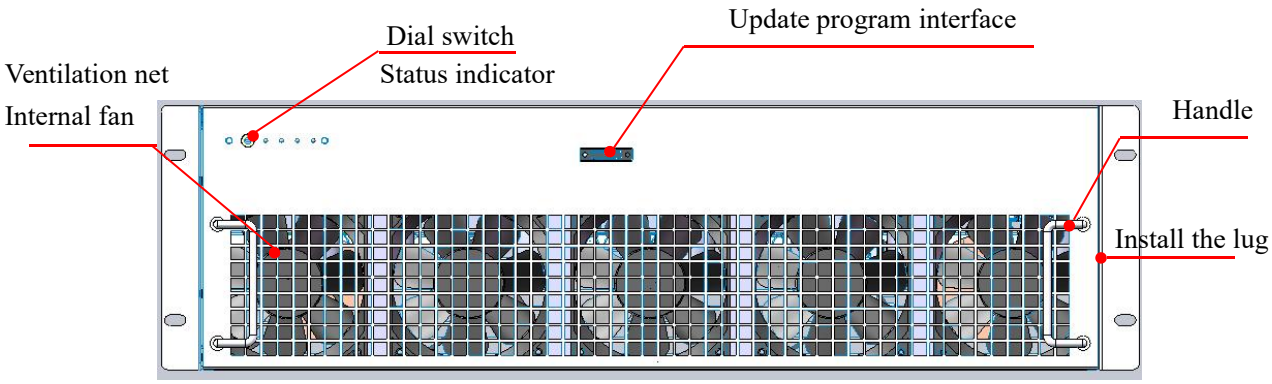

Figure 1-5 Front of 100kvar / 150A / 100A rack mounted module

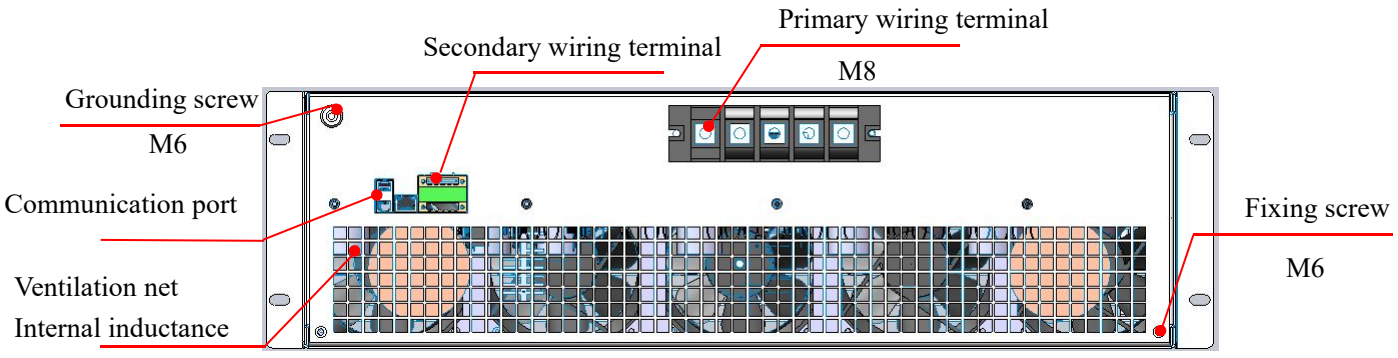

Figure 1-6 Back of 100kvar / 150A / 100A rack mounted module

■ **100kvar / 150A / 100A module: wall mounted**

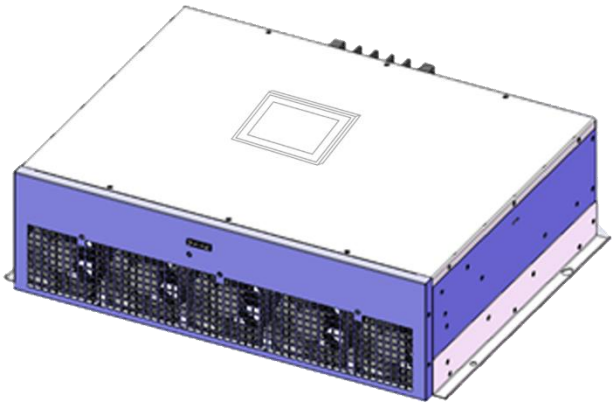

Figure 1-7 Appearance of 100kvar / 150A / 100A wall mounted module

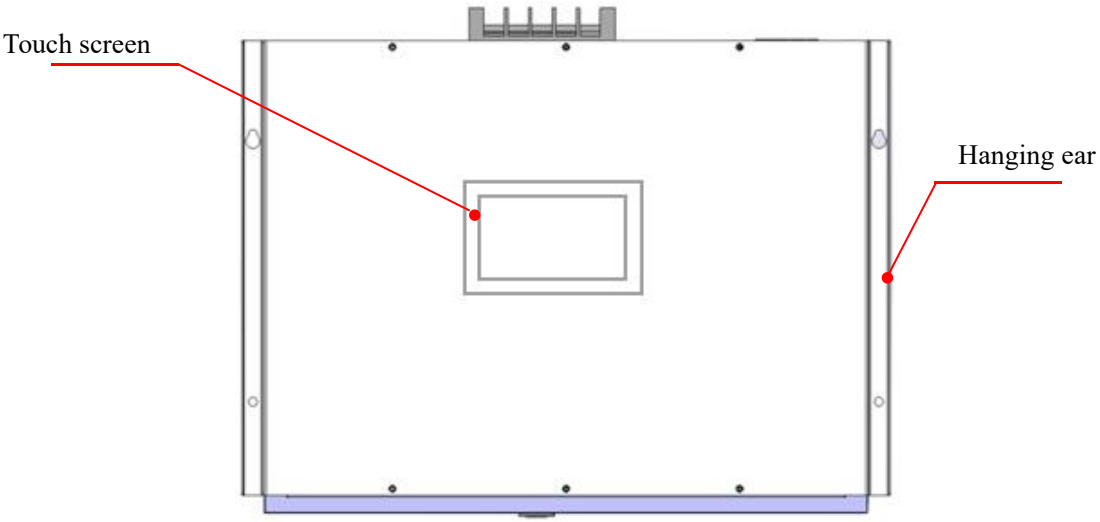

Figure 1-8 Front of 100kvar / 150A / 100A wall mounted module

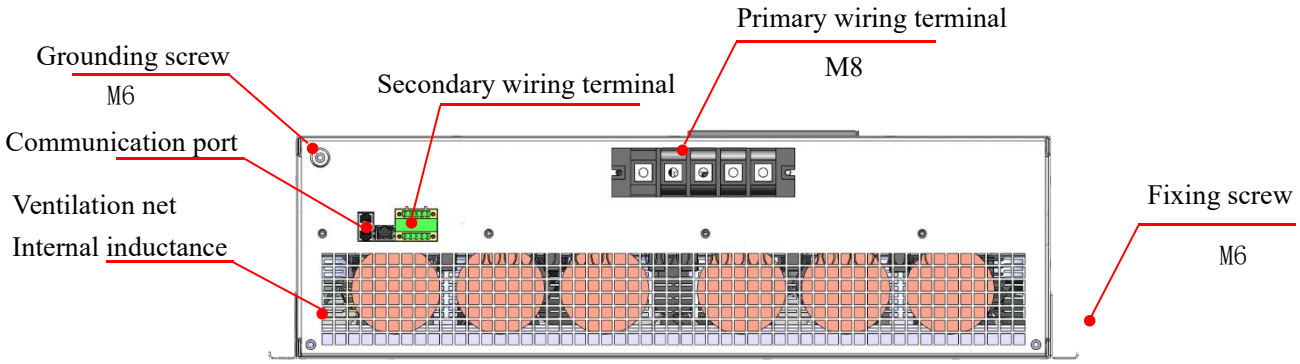

Figure 1-9 Top of 100kvar / 150A / 100A wall mounted module

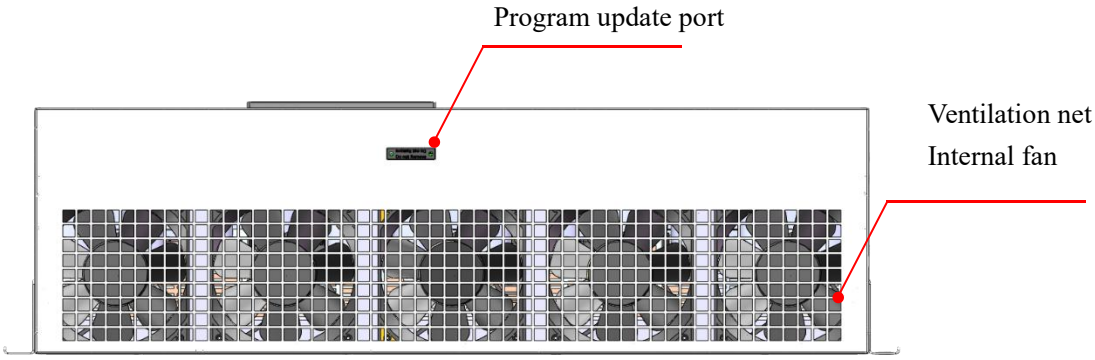

Figure 1-10 Bottom of 100kvar / 150A / 100A wall mounted modulee

■ **50kvar / 75A / 50A module: rack mounted**

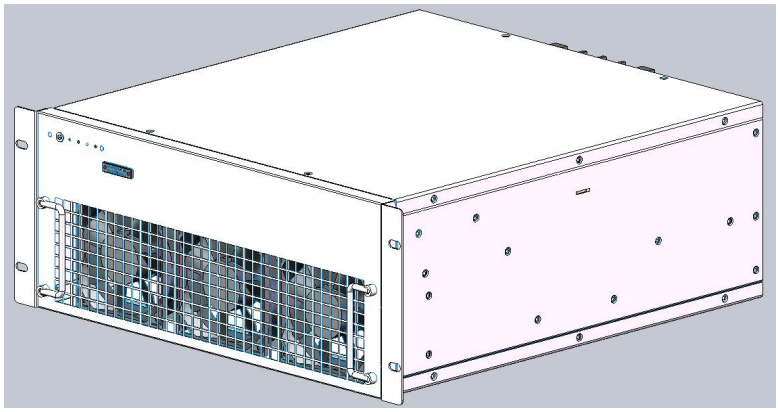

Figure 1-11 Appearance of 50kvar / 75A / 50A rack mounted module

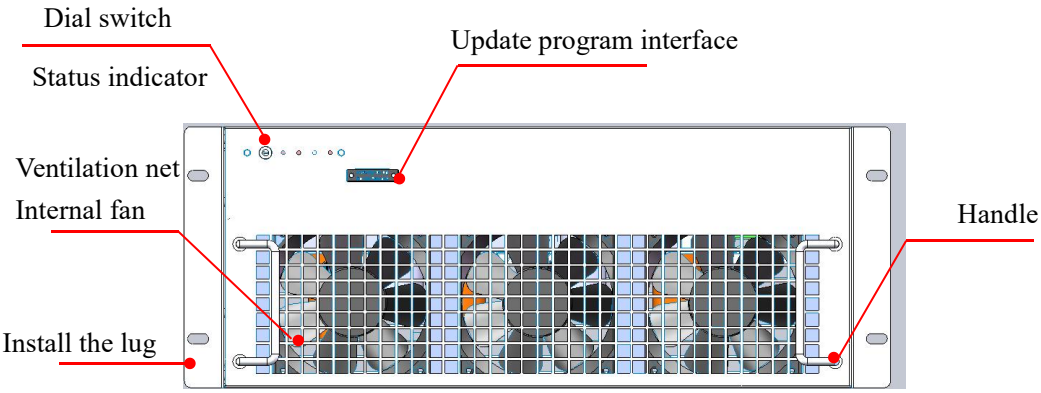

Figure 1-12 Front of 50kvar / 75A / 50A rack mounted module

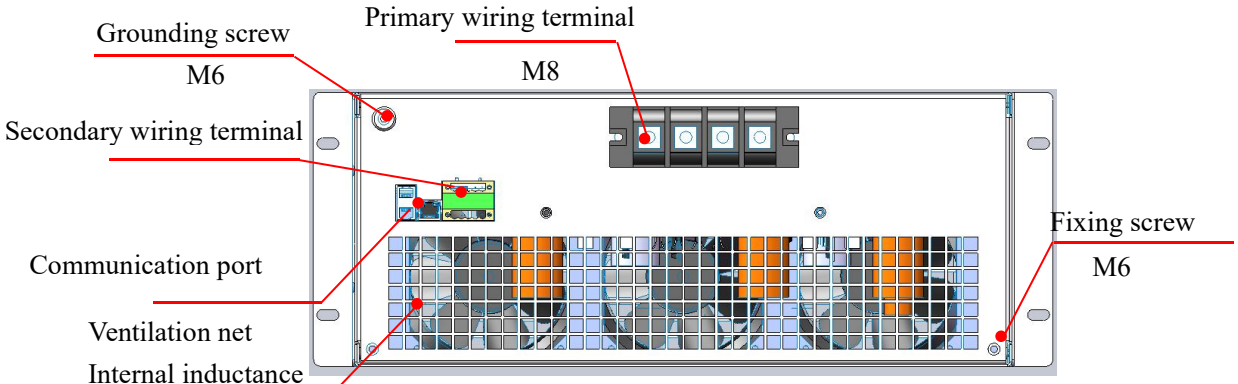

Figure 1-13 Back of 50kvar / 75A / 50A rack mounted module

■ **50kvar / 75A / 50A module: wall mounted**

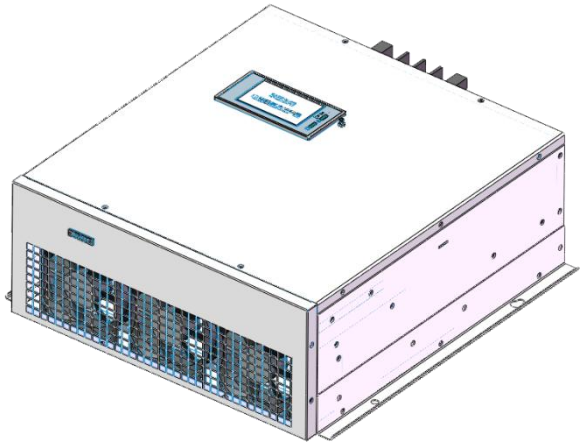

Figure 1-14 Appearance of 50kvar / 75A / 50A wall mounted module

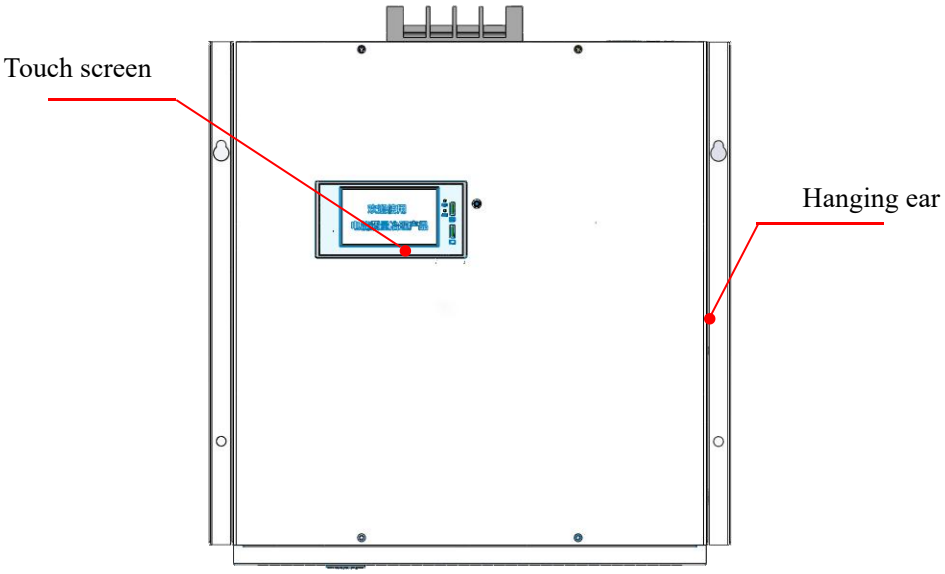

Figure 1-15 Front of 50kvar / 75A / 50A wall mounted module

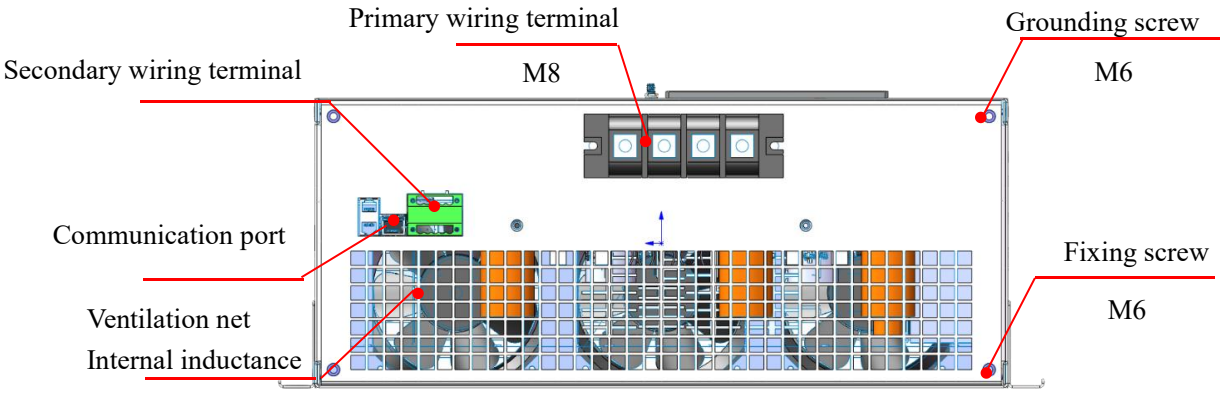

Figure 1-16 Top of 50kvar / 75A / 50A wall mounted module

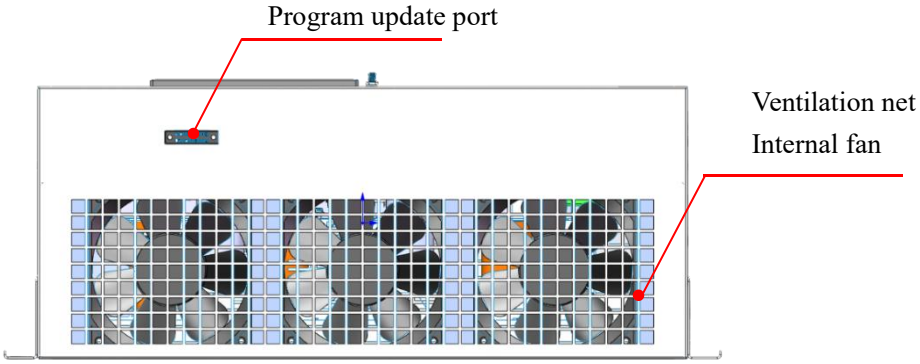

Figure 1-17 Bottom of 50kvar / 75A / 50A wall mounted module

■ 30kvar / 35A module: rack mounted

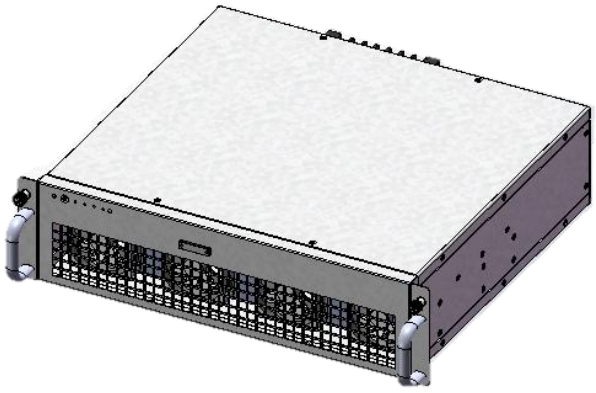

Figure 1-18 Appearance of 30kvar / 35A rack type module

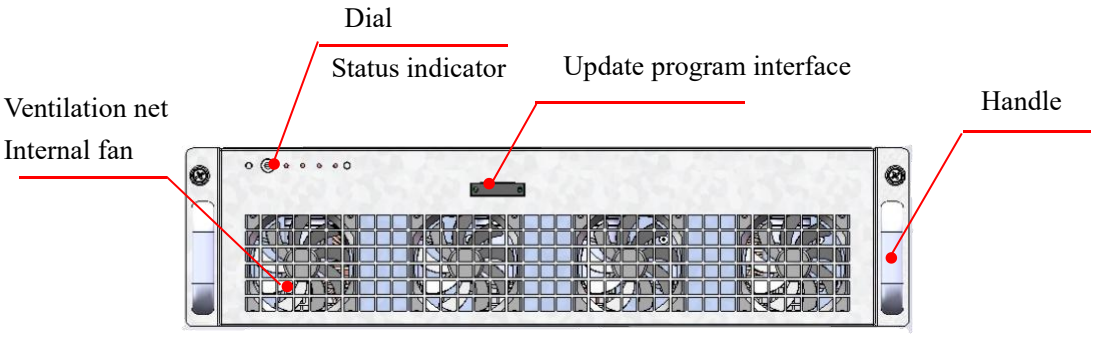

Figure 1-19 Front of 30kvar / 35A rack type module

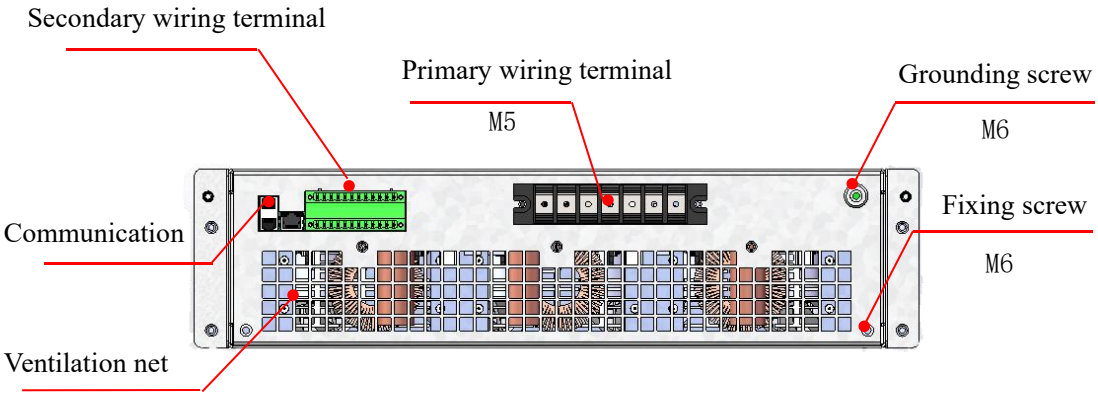

Figure 1-20 Back of 30kvar / 35A rack type module

■ 30kvar / 35A module: wall mounted

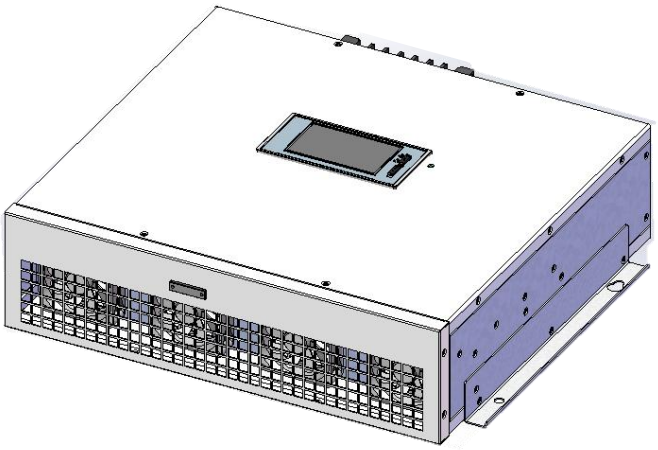

Figure 1-21 Appearance of 30kvar / 35A wall mounted module

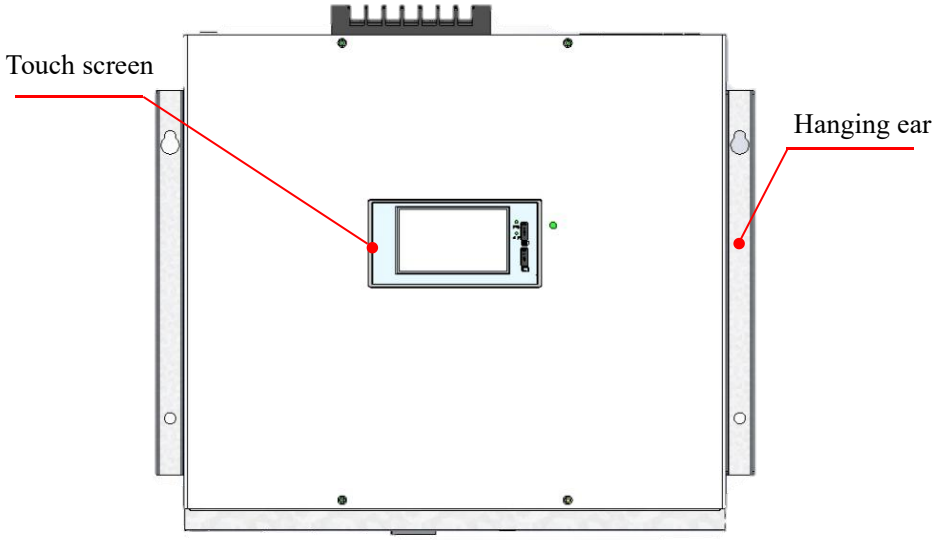

Figure 1-22 Front of 30kvar / 35A wall mounted module

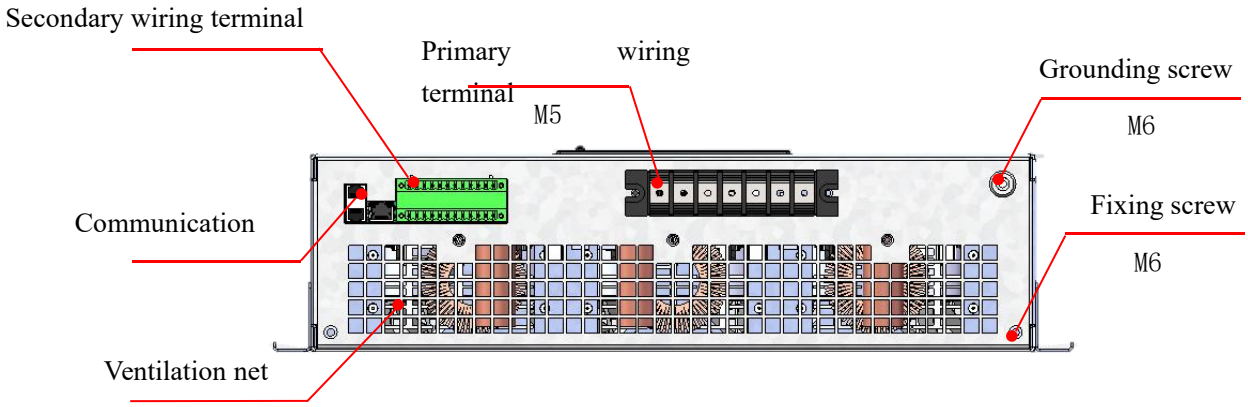

Figure 1-23 Top of 30kvar / 35A wall mounted module

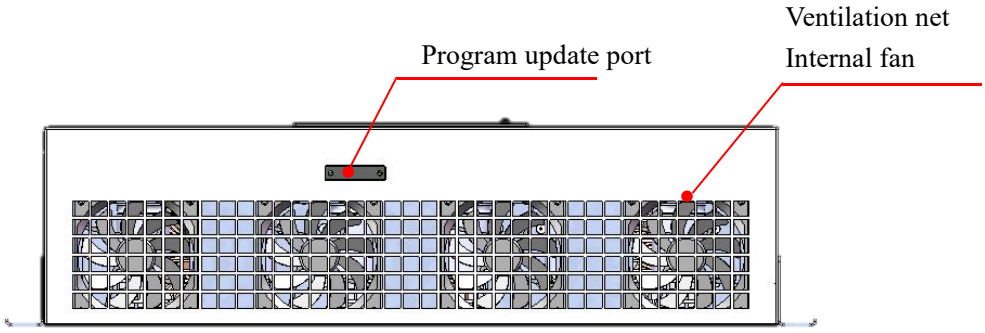

Figure 1-24 Bottom of 30kvar / 35A wall mounted module

1.2 Instructions of Wiring Terminals

■ **150kvar / 200A module wiring terminal:**

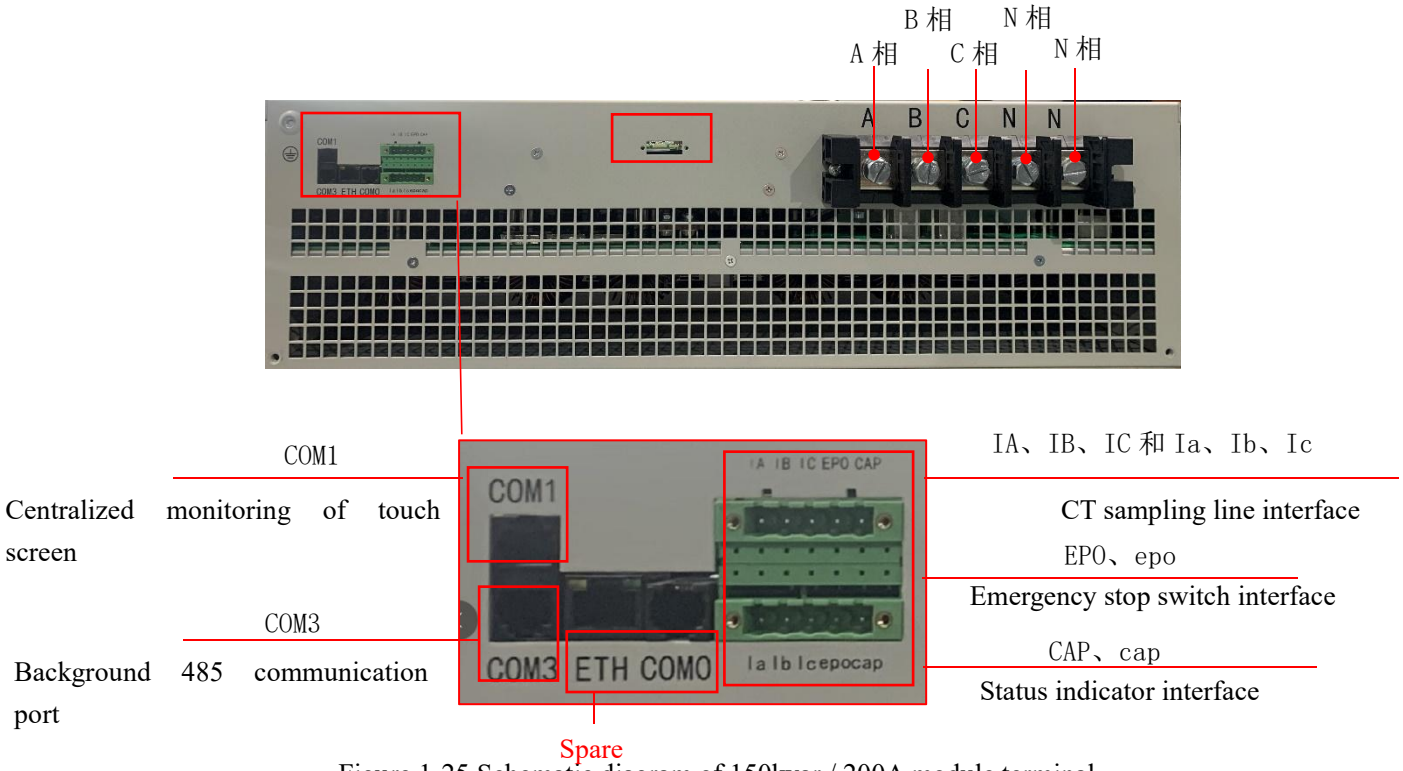

Figure 1-25 Schematic diagram of 150kvar / 200A module terminal

■ **100kvar / 150A / 100A module wiring terminal:**

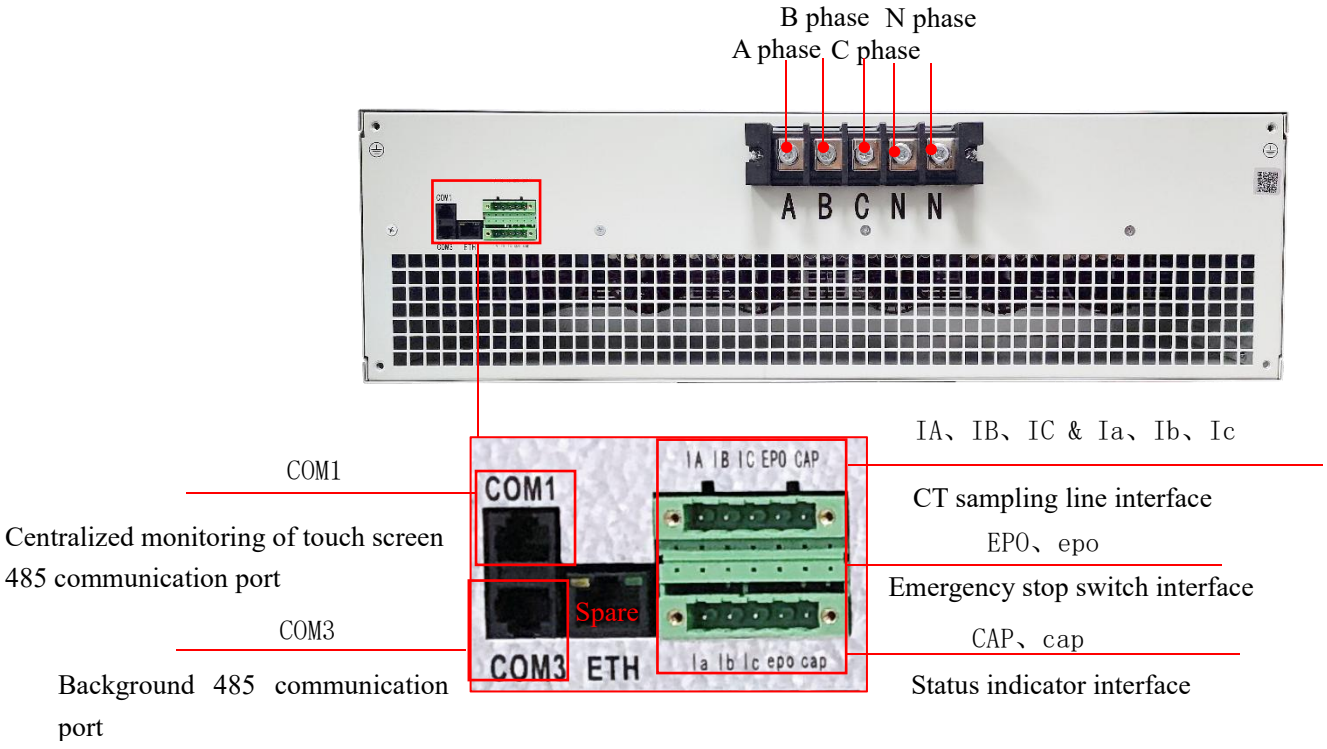

Figure 1-26 Schematic diagram of 100kvar / 150A / 100A module terminals

■ **50kvar / 75A / 50A module wiring terminal:**

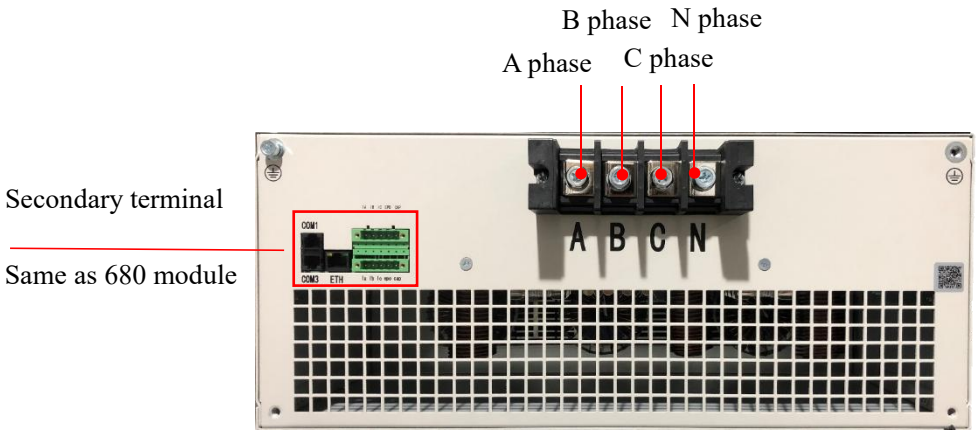

Figure 1-27 Schematic diagram of 50kvar / 75A / 50A module terminals

■ **30kvar / 35A module wiring terminal:**

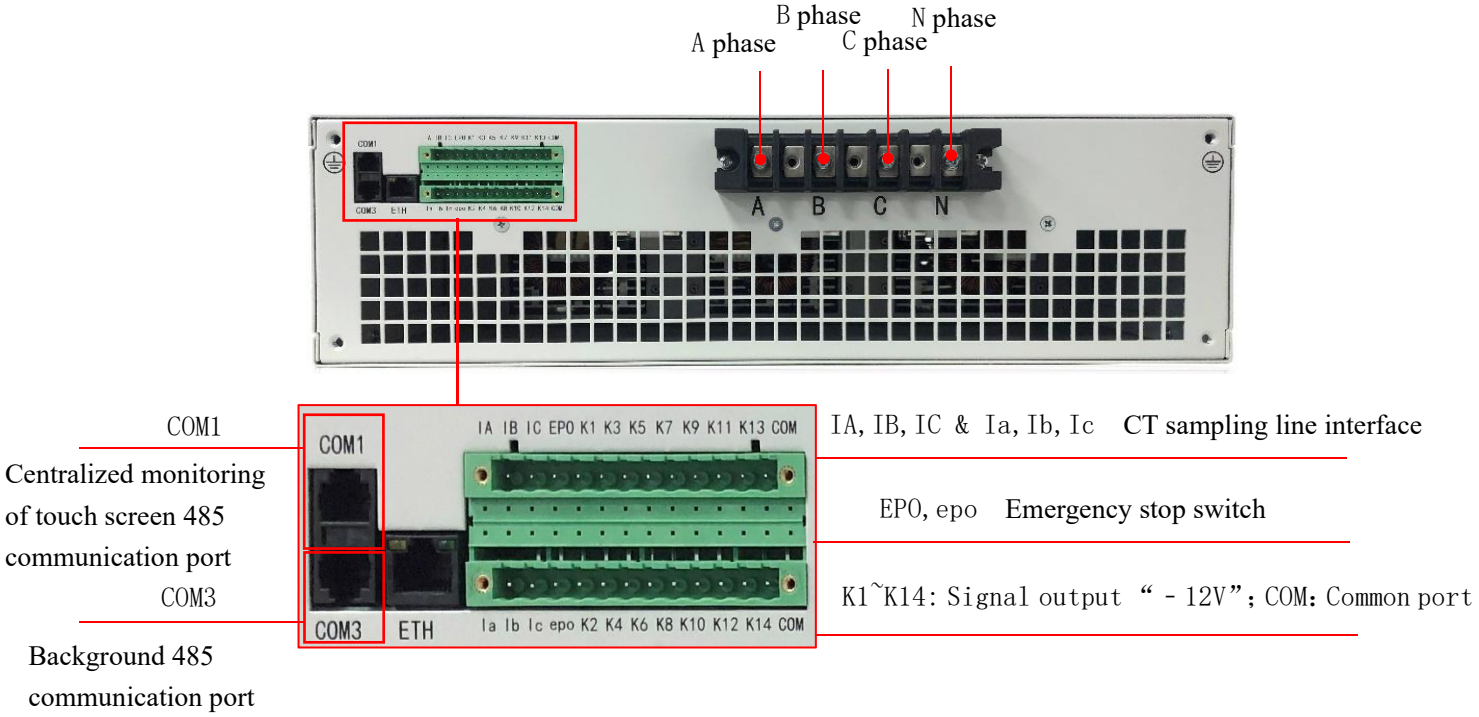

Figure 1-28 Terminal diagram of 30kvar / 35A module

■ **690V 100kvar / 100A / 50kvar / 50A module wiring terminal:**

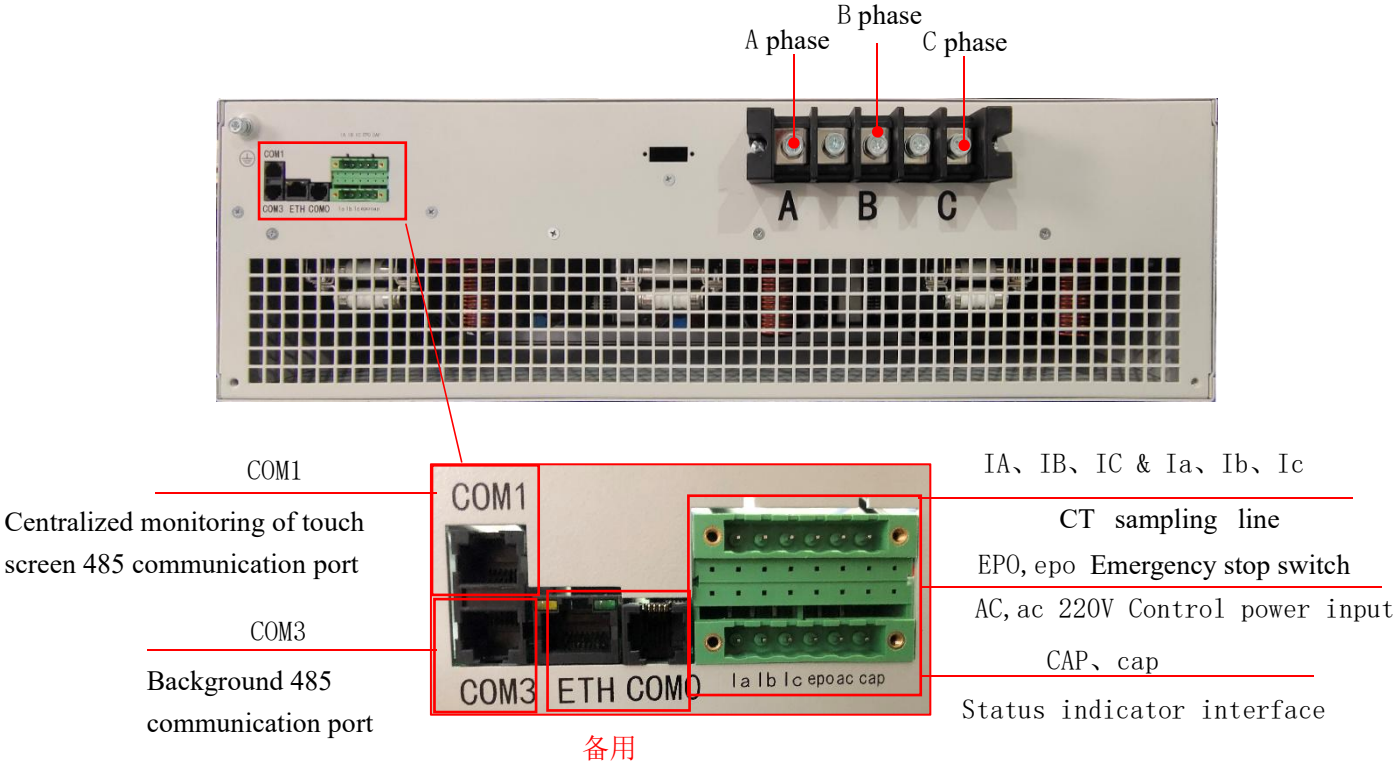

Figure 1-29 Schematic diagram of 690V 100kvar / 100A / 50kvar / 50A module terminals

1.3 Description of dial switch and status indicator

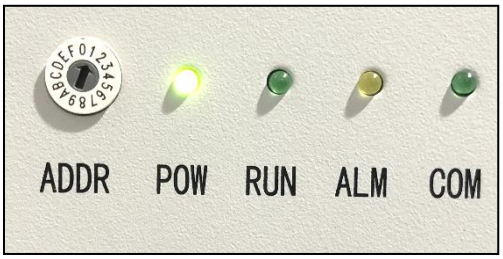

Figure 1-30 Schematic diagram of dial switch and status indicator

Dial switch: "ADDR" is the dial switch. For rack-mounted modules, since the module body does not have a 4.3-inch touch screen, the module address can be set by rotating the dial switch. Only after the correct module address is set, the external centralized monitoring touch screen can communicate with the module normally. For example, when there are two modules in the cabinet, the dial switch of the first module can be rotated to position 1, and the dial switch of the second module can be rotated to position 1. There are a total of 15 positions of dial switch, and 15 modules are connected in parallel at most, among which position 0 is not valid.

Status indicator: There are four status indicator: POW (power), RUN (run), ALM (alarm), and COM (communication). POW light shows whether the module is normally powered on. If the first

municipal electricity is connected, POW light (green) will be on. After the module is powered on and if the module is in normal running status, the RUN light (green) will be on. If the module alarms, the ALM light (yellow) will be on. If the module communication is normal, the COM light (green) will be on and flashing, and if the communication is abnormal, it will not be on.

1.4 Product Size

■ **150kvar / 200A module: rack mounted**

Front View

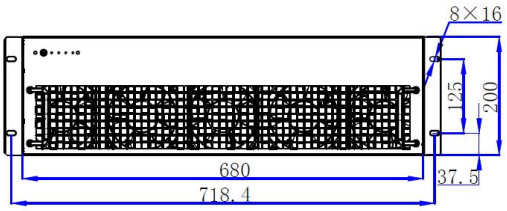

Rear View

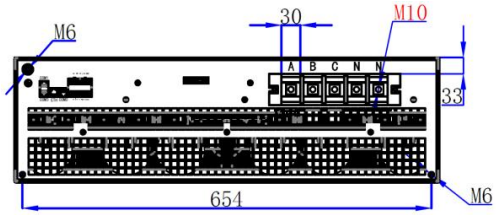

Left View

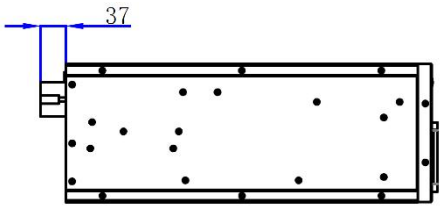

Top View

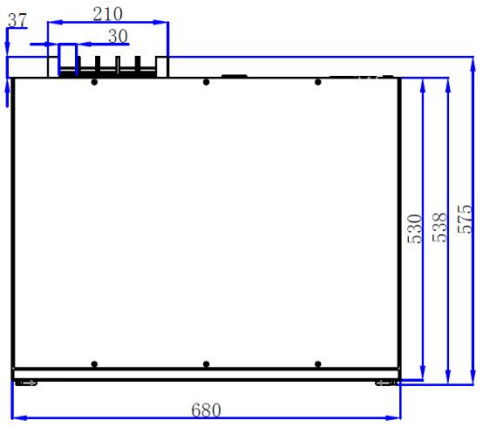

Figure 1-31 Dimension diagram of 150kvar / 200A rack mounted module

■ **150kvar / 200A module: rack mounted**

Front View

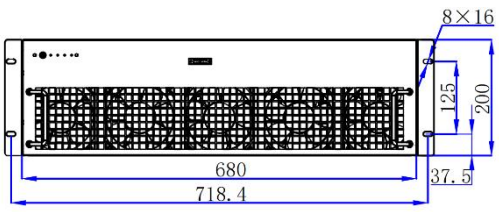

Rear View

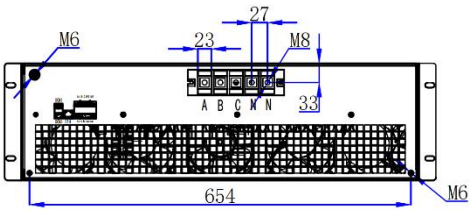

Left View

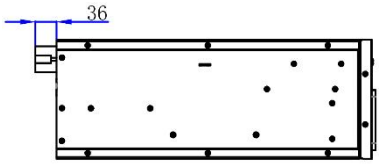

Top View

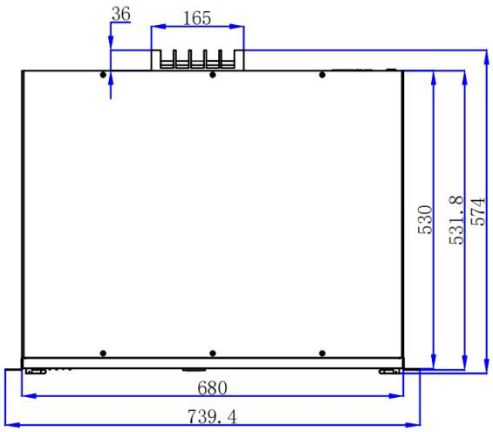

Figure 1-32 Dimension diagram of 100kvar / 150A / 100A rack mounted module

■ **100kvar / 150A / 100A module: wall mounted**

Bottom View

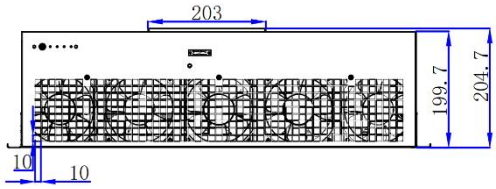

Top View

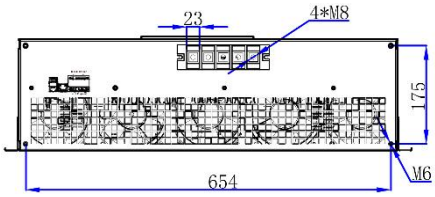

Side View

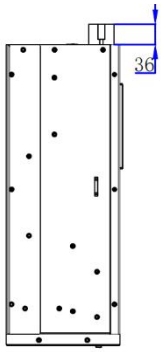

Front View

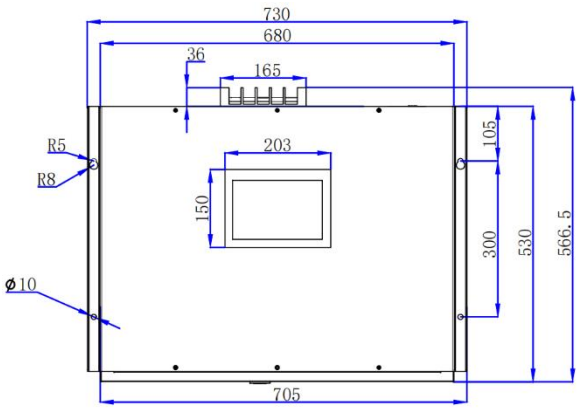

Figure 1-33 Dimension diagram of 100kvar / 150A / 100A wall mounted module

■ **50kvar / 75A / 50 module: rack mounted**

Front View

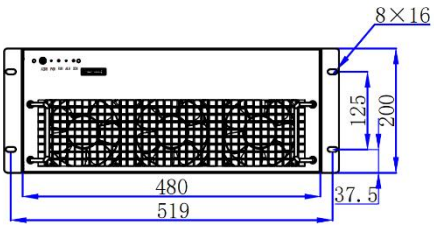

Rear View

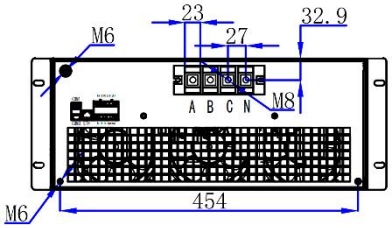

Side View

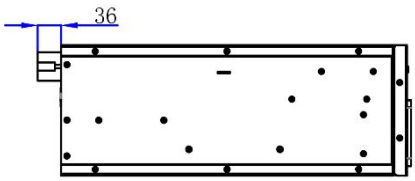

Top View

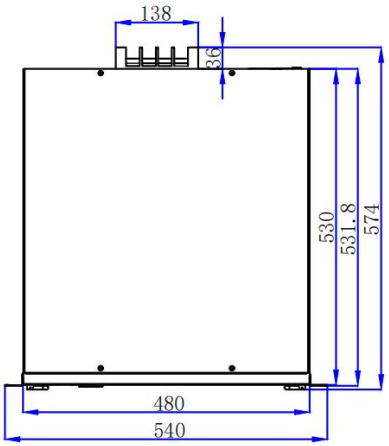

Figure 1-34 Dimension diagram of 50kvar / 75A / 50A rack mounted module

■ **50kvar / 75A / 50A module: wall mounted**

Bottom View

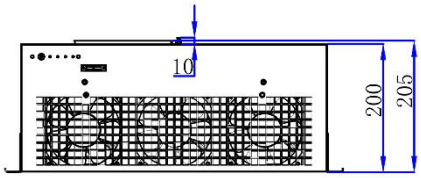

Top View

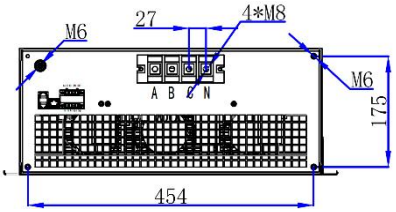

Side View

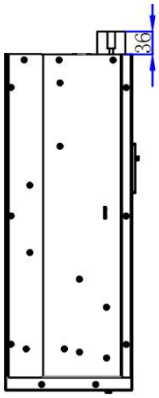

Front View

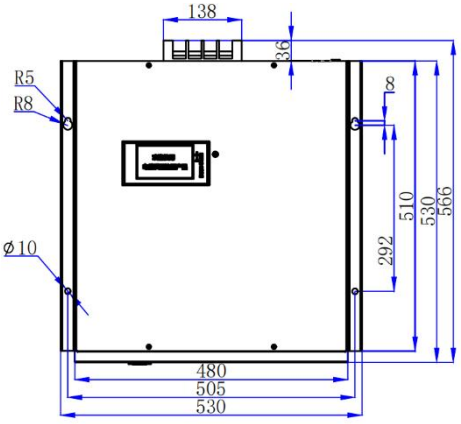

Figure 1-35 Dimension diagram of 50kvar / 75A / 50A wall mounted module

■ **30kvar / 35A module: rack mounted**

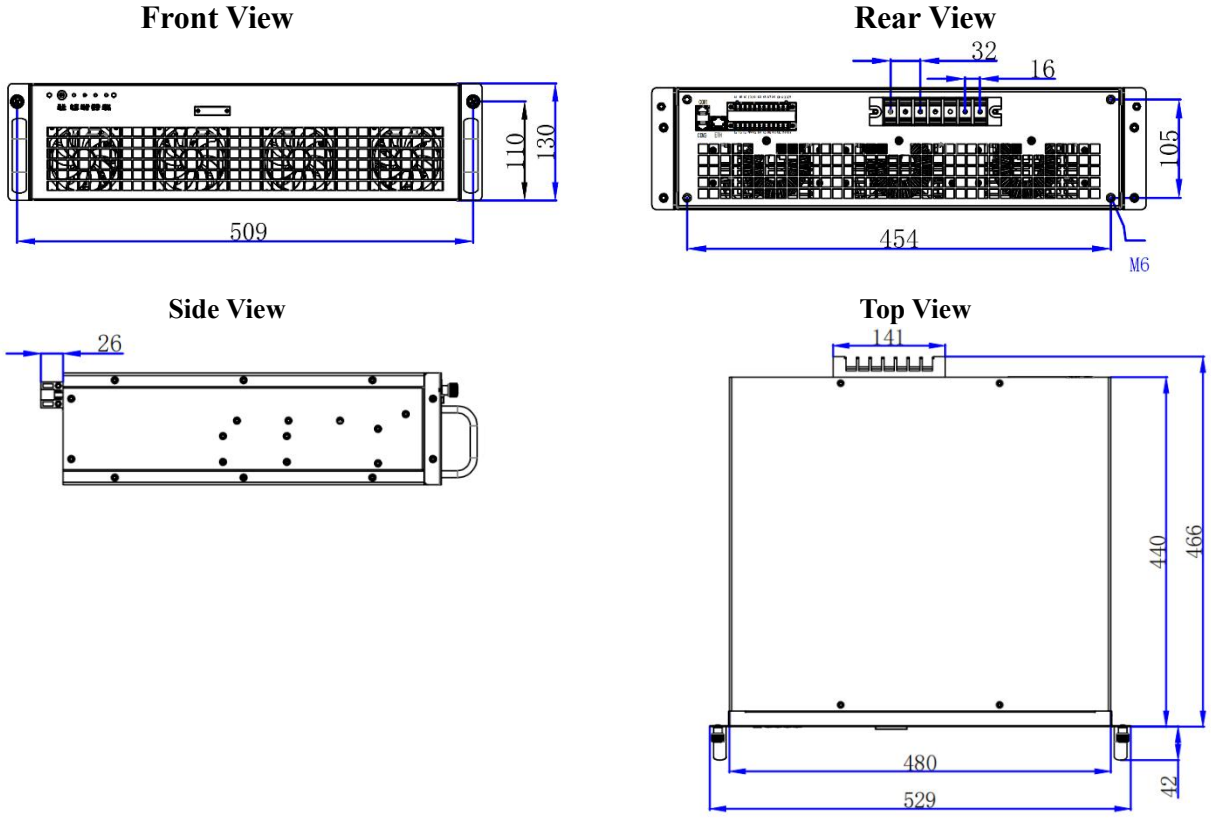

Figure 1-36 Dimension diagram of 30kvar / 35A rack type module

■ **30kvar / 35 module: wall mounted**

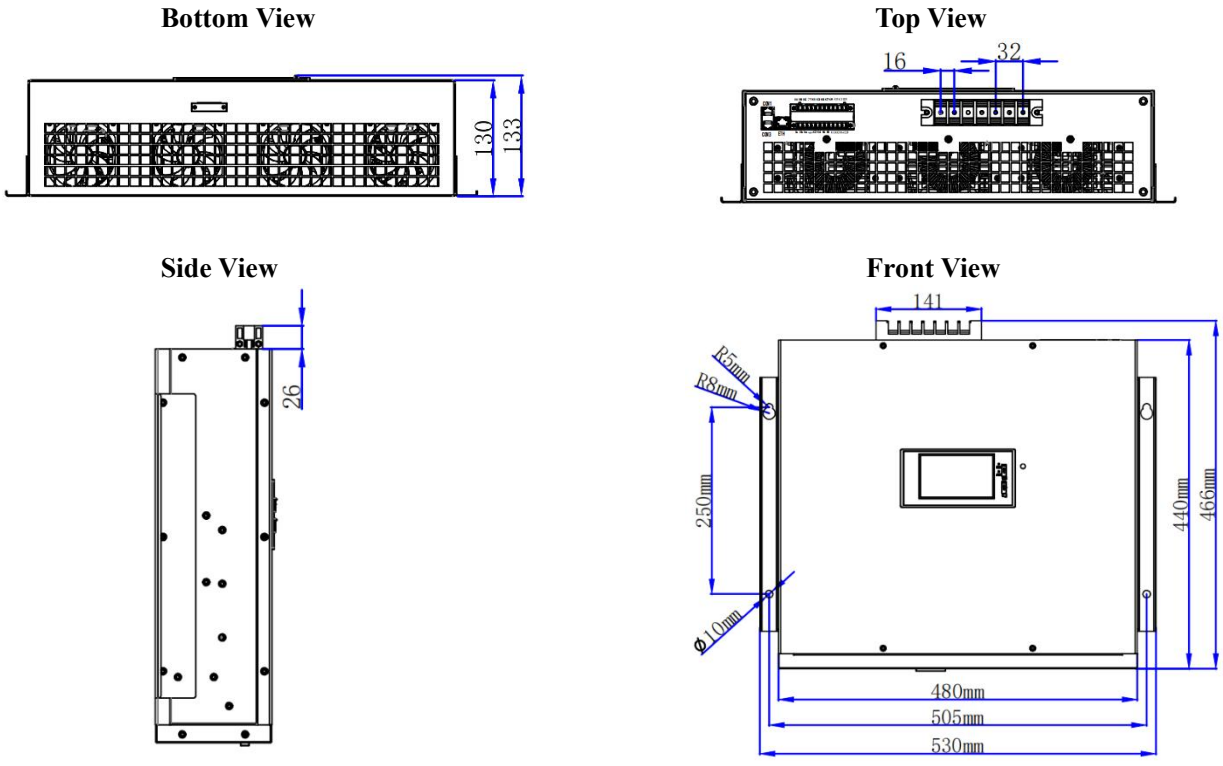

Figure 1-37 Dimensions of 30kvar / 35A wall mounted module

■ **690V 100kvar / 100A / 50kvar / 50A module: rack mounted**

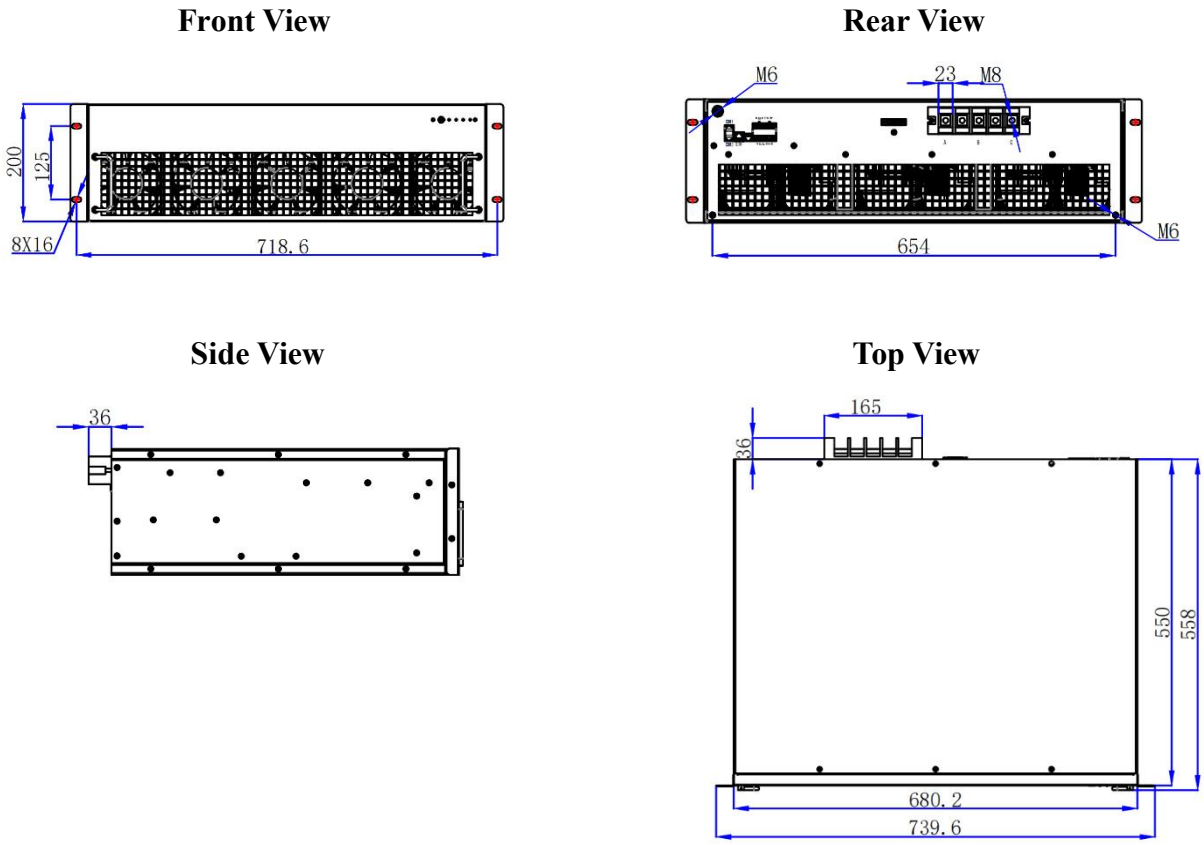

Figure 1-33 Dimension diagram of 690V 100kvar / 100A / 50kvar / 50A rack mounted module



Chapter Two System Connection

2.1 Diagram of System Connection……32
2.2 System Composition and Accessories Selection……34

Chapter Two System Connection

2.1 Diagram of System Connection

■ **Single machine**

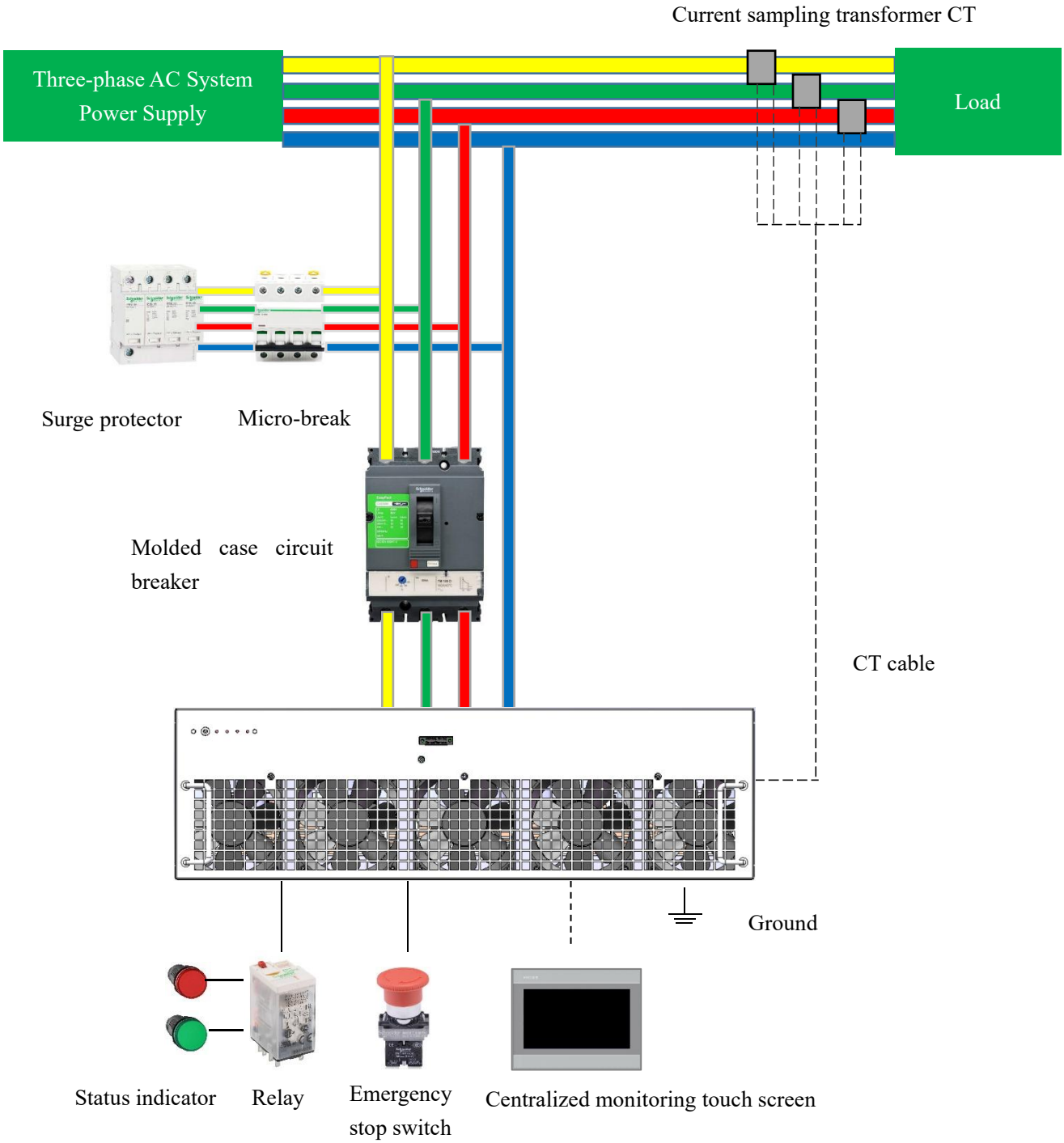

Fig.2-1 Diagram of APF/SVG Single-machine System Connection

■ **Multi-machine parallel**

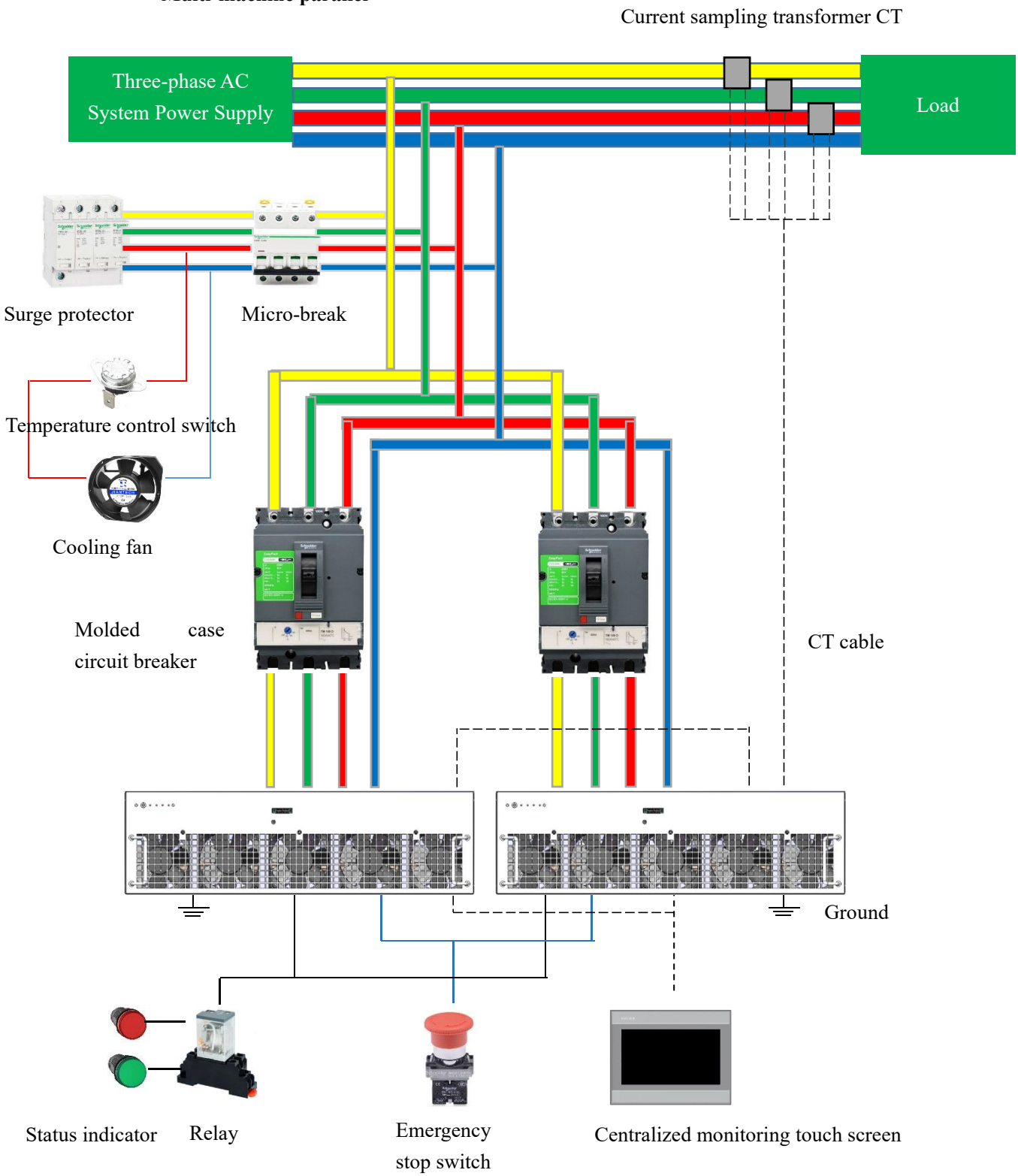

Fig.2-2 Diagram of APF/SVG Multi-machine Parallel System Connection

NOTE

- The diagram of system connection is only used as a reference for the main components of the general case, and some items will be slightly different depending on the item.
- The wall-mounted module is basically the same as the rack-type module system, but the installation method is different.
- The position of the current sampling transformer is different, and the secondary wiring of the current transformer is slightly different.Herein we will not go into details here to see the location of the transformer.
- The secondary wiring in the system connection diagram is simply indicated, and the detailed wiring refers to the engineering drawings of the product.

2.2 System Composition and Accessories Selection

Accessory name	Installation location	Function Description	Selection proposal
 Molded case circuit breaker (must be installed)	● Input end of module power supply ● Circuit breaker of rack-type module is installed into cabinet ● Circuit break of wall-mounted module is installed in the distribution box matched with the wall-mounted module.	● Control module on and off ● It also has overload, short circuit and under-voltage protection functions to protect the line and module from damage.	● Generally, one module can be configured with one molded case circuit breaker, or multiple modules can be configured with one large molded case circuit breaker. ● The rated current of the molded case circuit breaker is recommended according to the 1.25~1.5 times of the rated current of the module. ● Number of poles 3p/4p, thermal magnetic tripping ● Breaking capacity of 35ka and above
 Surge protector (optional installed)	● Input end of the module power supply, the upper port of the molded case circuit breaker ● Installed in the cabinet or in the distribution box	● Provides safety protection for cabinets and modules.When a spike current or voltage is generated in an electrical circuit, the surge protector can conduct shunting in a very short period of time, thereby preventing over-voltage from damaging other equipment in the electrical circuit.	● Number of poles 3p+n ● Maximum discharge current Imax 40kA and above

 Micro-break (optional installed)	● Input end of surge protector ● Installed in the cabinet or in the distribution box.	● The function of installing the air conditioner in front of the surge protector is to avoid fire accidents such as burning when the internal components of the surge protector are continuously short-circuited.	● Rated current 20A and above ● Number of poles 4P
 Centralized monitoring touch screen (optional installation)	● Cabinet mounted, can be installed on the cabinet door ● Wall mounted, can be mounted on the door of the distribution box ● Communication is connected to the com1 port of the module	● Centralized monitoring makes it easier to view and set parameters.	● Provided by our company, it can also be purchased separately
 Emergency stop switch (optional installation)	● Installed on the cabinet door or on the door of the distribution box. ● Connected to the EPO and epo ports of the module.	● When an abnormal situation occurs in the cabinet or the module (smoke, abnormal noise, flare), the emergency stop switch can be pressed immediately to stop the module and effectively protect the module.	● Button release type ● Operating part with diameter 40mm
 Temperature control switch (optional installation)	● Installed in the terminal block of cabinet ● Connected to input port of fan power supply	● On-off fan power supply	● Withstand voltage 250V ● Overload current 10A ● Normally open type, closed over 40 ℃
 Fan (must be installed)	● Installed on the rear cabinet door of cabinet body	● The number of modules ≤2, Install two fans ● The number of modules ＞2, Install four fans	● AC220V 50HZ ● 87W and above ● Air volume 850CFM ● Running direction by counterclockwise ● Recommended size 254*254*89

<table>
<tr><td>
Relay
(optional
installation)</td><td>● Installed in the cabinet
● Connected to the CAP and Cap ports of the module</td><td>● Control status indicator, display module run/stop, normal/fault status</td><td>● AC230V（AC250V/5A）
● 8 pins, 2 normally open 2 normally closed</td></tr>
<tr><td>
Indicator light
(optional
installation)</td><td>● Installed on the cabinet door
● Connected to the normally open normally closed contact circuit of the relay.</td><td>● Display module run/stop, normal/fault status</td><td>● AC220V
● Red and green
● Torsional head diameter 22mm</td></tr>
<tr><td>
Current
Transformer
(must be installed)</td><td>● Installed on the main busbar of the power distribution system.</td><td>● Detect the load current of the power distribution system.</td><td>● The ratio must be chosen between /5, 100/5-10000/5
● Accuracy of 0.5 or more
● Rated load 2.5VA or more</td></tr>
<tr><td colspan="4">Other accessories</td></tr>
<tr><td>
Distribution box
(wall mounted)</td><td>● When the wall-mounted module is installed on the wall, the electrical box is installed at the input end of the module.</td><td>● Install accessories such as circuit breakers.</td><td>● Reference size（W*H*D）
300*400*200 (1 module)
400*500*200 (2 modules)
500*600*200 (3~4 modules)
600*800*200 (5~6 modules)</td></tr>
<tr><td>Primary
cable/copper row</td><td colspan="3">Cable selection:
● The selection of APF/SVG incoming cable under different capacity and current levels shall be in accordance with electrical regulations and shall be selected in consideration of environmental conditions. The following table may be used as a reference:
<table><tr><td>Rated current of device</td><td>35A</td><td>50A、75A</td><td>100A</td><td>150A</td><td>200A</td></tr><tr><td>ABC three phase cable</td><td>16 ㎜²</td><td>25 ㎜²</td><td>35 ㎜²</td><td>50 ㎜²</td><td>95 ㎜²</td></tr><tr><td>N-wire specification</td><td>25 ㎜²</td><td>50 ㎜²</td><td>50 ㎜²∗2</td><td>50 ㎜²∗2</td><td>95㎜²∗2</td></tr></table>
Note: APF is rated value for current, SVG is rated for kvar, and the conversion relationship is 1kvar ≈ 1.5A.If it is an aluminum cable, it corresponds to the corresponding current capacity specification of copper wire .
● The cable is usually made of BVR multi-strand copper core PVC insulated soft wire.
● If the current is relatively large, two pairs can be used according to the situation;</td></tr>
</table>

<table>
<tr><td></td><td>
● The general selection of the N line is consistent with the phase line.In the case where the three-phase unbalance or the third harmonic is large, it is recommended to select a larger cable for the N line because the current at the N line is larger.If the N line has an accurate current value in the actual items, the n line specification can be selected according to the current.
Selection of copper bar:
<table>
<tr><td>Rated current of device</td><td>150A below</td><td>150A~300A</td><td>300A~600A</td><td>600A~900A</td></tr>
<tr><td>Specification of copper bar</td><td>15*3</td><td>30*4</td><td>50*5</td><td>60*8</td></tr>
</table>
_
</td></tr>
<tr><td>Other cable</td><td>
<table>
<tr><th>Name</th><th>Specification</th></tr>
<tr><td>Primary cable of surge protector</td><td>6mm²BVRmulti-strand copper core cord</td></tr>
<tr><td>Fan loop cable</td><td rowspan="3">1.5mm² BVR multi-strand copper core cord</td></tr>
<tr><td>Emergency stop switch loop cable</td></tr>
<tr><td>Indicator loop cable</td></tr>
<tr><td>Ground cable</td><td>Yellow-green BVR multi-strand copper core cord;
Recommendation for protection ground PE line selection: When the AC phase line diameter S<16mm2, the line diameter is the same as the phase line; the phase line diameter is 16≤S≤35mm2, the protection ground line diameter is 16mm2; the phase line S>35mm2, select Half of the phase line diameter is used as the wire diameter of the protective ground wire.</td></tr>
<tr><td>CT current transformer sampling signal cable</td><td>The CT cable is a 2.5mm2 shielded twisted pair cable RVSP2×2.5 (line length L<15m), or a 4mm2 shielded twisted pair cable RVSP2×4 (line length 15m<L<30m).</td></tr>
<tr><td>Touch screen communication line</td><td>Telephone line, supported by our company</td></tr>
</table>
Reference selection:
</td></tr>
</table>

NOTE

● The main related accessories of the above APF/SVG system are as described in the above table for reference.But it does not mean that all projects are exactly the same.If there are some special or differences in the actual project, it can be adjusted according to the situation.

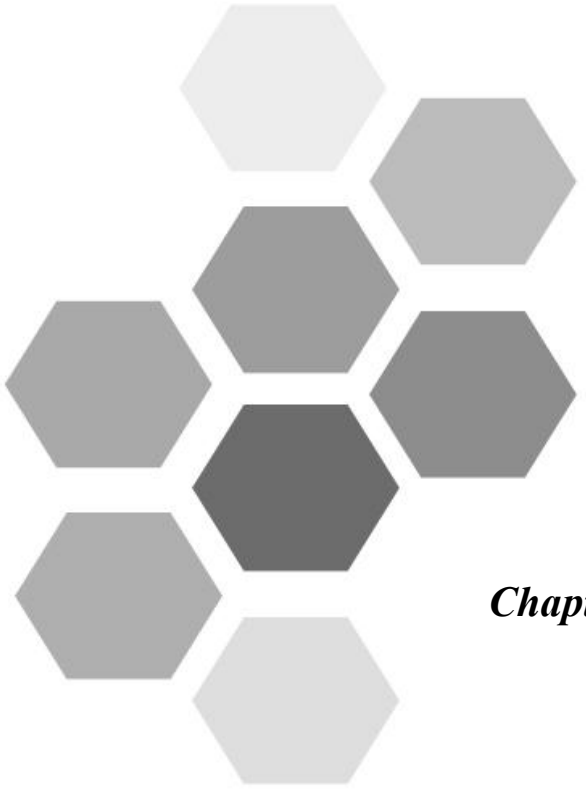

Chapter Three Installation and Wiring

3.1 Installation Precautions·····39
3.2 Installation Guide·····42
3.3 Wiring·····48

Chapter Three Installation and Wiring

3.1 Installation Precautions

3.1.1 Installation Environment

Requirements of Installation Environment	
 **Attention** **Warning**	1) Ambient temperature: The ambient temperature has a great influence on the life of APF/SVG. The operating ambient temperature of APF/SVG is not allowed to exceed the allowable temperature range (-10°C~45°C).If the temperature is lower than -10 °C, it is necessary to add suitable heating equipment; if the temperature is higher than 45 °C, it is necessary to increase the cooling and cooling equipment such as air conditioner. 2) APF/SVG is installed on the surface of the flame-retardant object, and there is enough heat dissipation space around the installation, which generates a lot of heat when it works. 3) Please install it in a place where it is not easy to vibrate.The vibration should not be greater than 0.6g.Pay special attention to stamping equipment such as punching machines. 4) Avoid placing it in a place where it is protected from direct sunlight, moisture, or water droplets. 5) Avoid places that are corrosive, flammable, or explosive in the air. 6) Avoid being placed in places with oil and dust. 7) When the rack module is installed in the cabinet, the cabinet must meet relevant standards and regulations. 8)Wall-mounted modules need to be installed where there are few people moving around and must be clearly marked. 9) The wall mounting location must be on a dry wall.

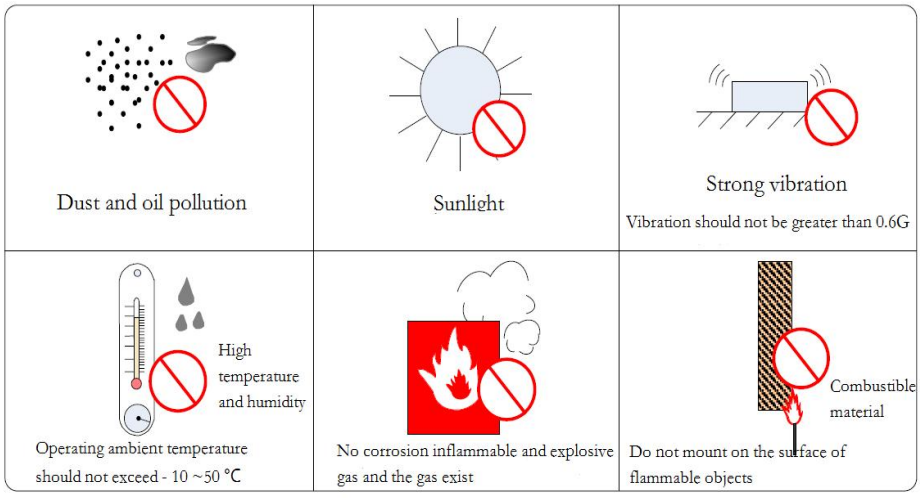

Fig.3-1 Schematic Diagram of Ambient Environmental Requirements

3.1.2 Installation Space and Direction

1）Installation space

When installing APF/SVG, the space of air inlet and outlet should be ensured.

Requirements of Installation Space	
Attention Warning	● Do not block the air outlet of module ● Vertical cabinet type installation, outlet in front and back of cabinet. Reserve at least **600 mm** of air space and rear maintenance space. Ensure that the back door of the cabinet can be opened and closed normally. ● Wall-mounted installation, at least **150mm** of inlet and outlet air space should be reserved at the upper and lower exits of the module. ● The wall-mounting position should be more than 1.5 meters away from the ground and marked with an electric shock hazard warning.

■ **Space requirement of cabinet type installation**

When installed by cabinet type, the module enters the wind from the front and exhausts to the rear.Heat is emitted from the back.

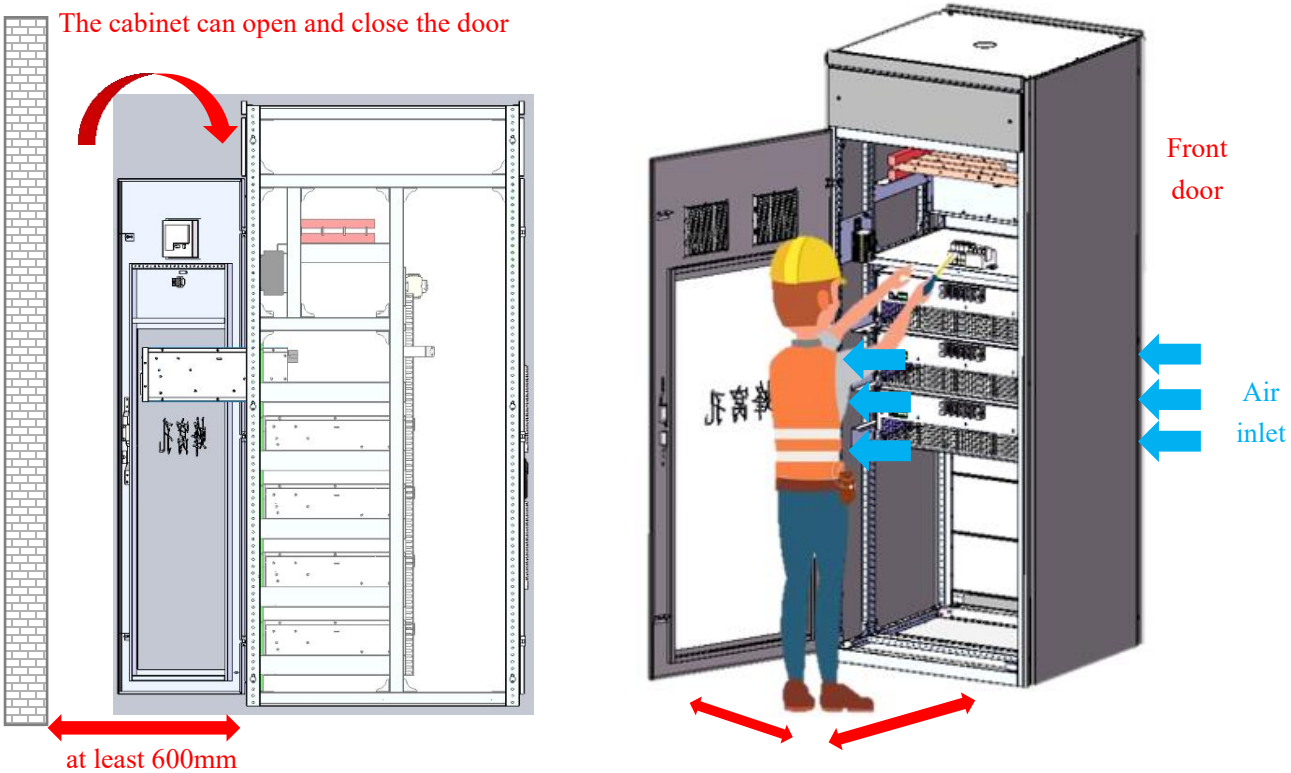

Fig. 3-2 Schematic Diagram of Requirements for the Installation Space of the Cabinet

■ **Space requirement of wall-mounted installation**

When installed in a wall mount, the module enters the air from below and vents upwards.Heat is emitted from the bottom up.

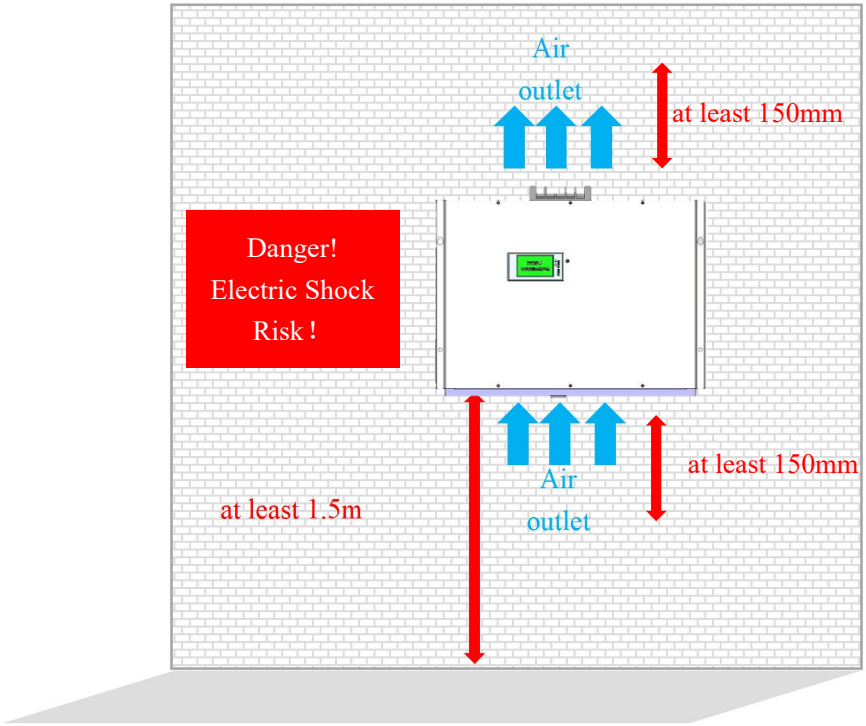

Fig.3-3 Schematic Diagram of Requirement of Wall-mounted Installation Space

2）Installation direction

When installing the device, please install it horizontally, and try not to install it in other directions such as side-lying, inverted or inclined. The wall hanging module is the same, try to install the wall hanging vertically, do not hang side or upside down.

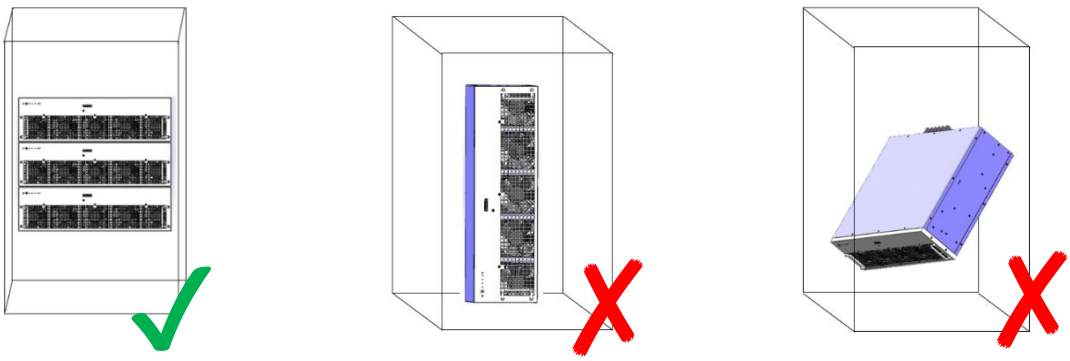

Fig.3-4 Schematic Diagram of Module Installation Direction

3.2 Installation Guide

3.2.1 Installation of cabinet type

(1) Cabinet composition

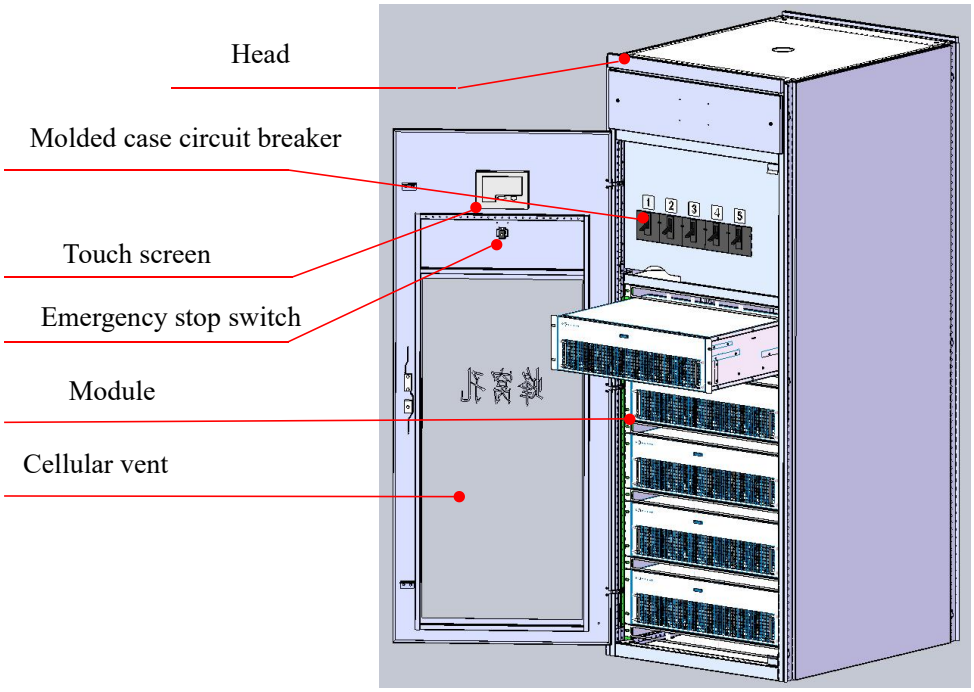

Fig.3-5 Schematic Diagram of Whole Cabinet (Front View)

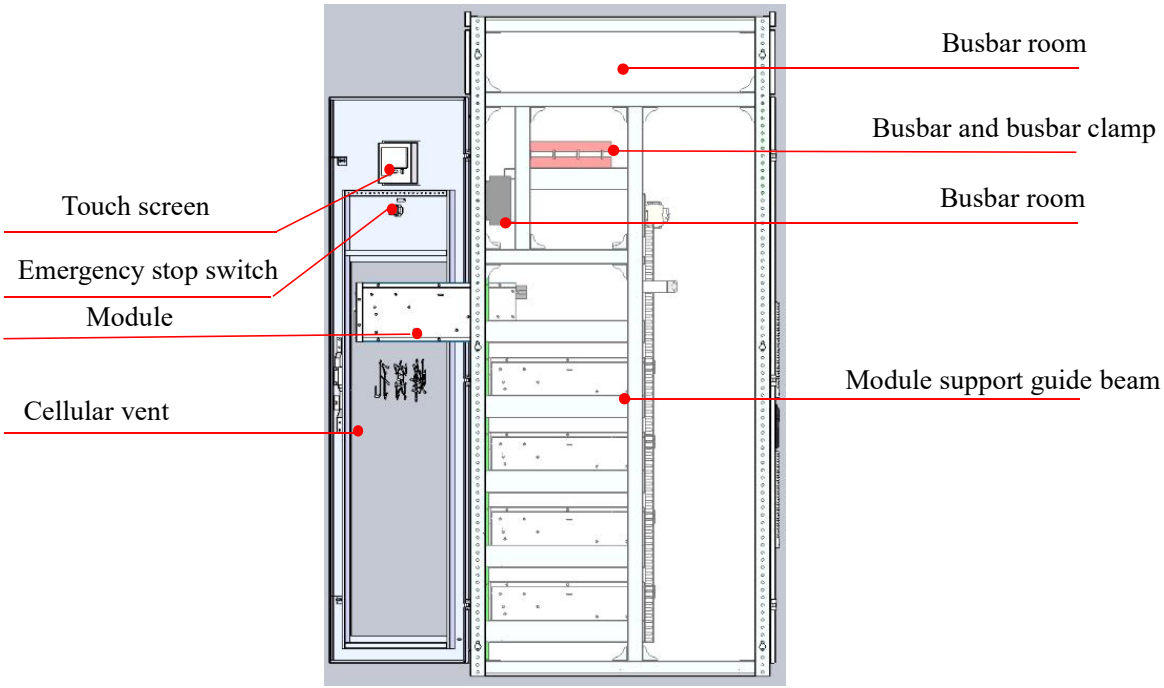

Fig.3-6 Schematic Diagram of Whole Cabinet (Side View)

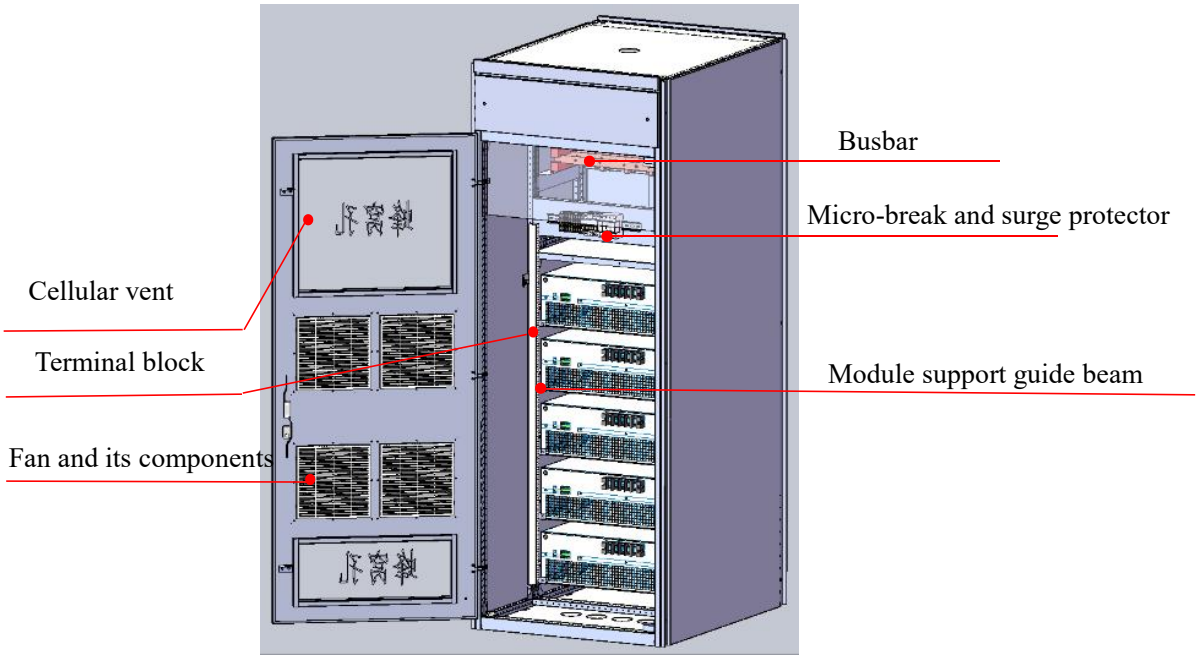

Fig.3-7 Schematic Diagram of Whole Cabinet (Rear View)

The equipment is divided into three parts from top to bottom, the most top end is the busbar room, and the system that passes through the low-voltage equipment runs through the busbar.The second part is the circuit breaker room. Each module is assigned a circuit breaker. The multiple circuit breakers are connected by internal busbars. The busbars are connected to the busbar system through the busbars.Below is the module room, which can hold up to 5 modules in a single cabinet.

A touch screen and an emergency stop button can be installed on the cabinet door.The module itself comes with a 4.3-inch touch screen. If you need better monitoring of the module status and more convenient operation, you can install a 7-inch external touch screen on the cabinet door.The function of the emergency stop button is to abnormally sound or smoke, etc., immediately press the emergency stop button to make the module stand by, avoiding the spread and aggravation of the fault caused by the module operation.

The front and rear door panels of the module room need to open the honeycomb hole for ventilation and heat dissipation. The direction of the air duct is for the front air inlet and the rear air outlet.

When the number of modules≤2, it is recommended to install two fans in the rear door.

When the number of modules≥2, it is recommended to install four fans in the rear door.

NOTE

- As explained in Chapter 2, system connection, some parts of cabinet body are necessary, and some parts are optionally installed. It can be selected according to the actual items situation. The cabinet structure and fittings are designed by our structural engineers and electrical engineers, only considering the general items situation, some parts are not installed, such as cabinet door

installation status indicator, cabinet door ammeter, etc.

(2) Installation and fixing of module

After lifting
Push forward from the front
to the back and fix it.

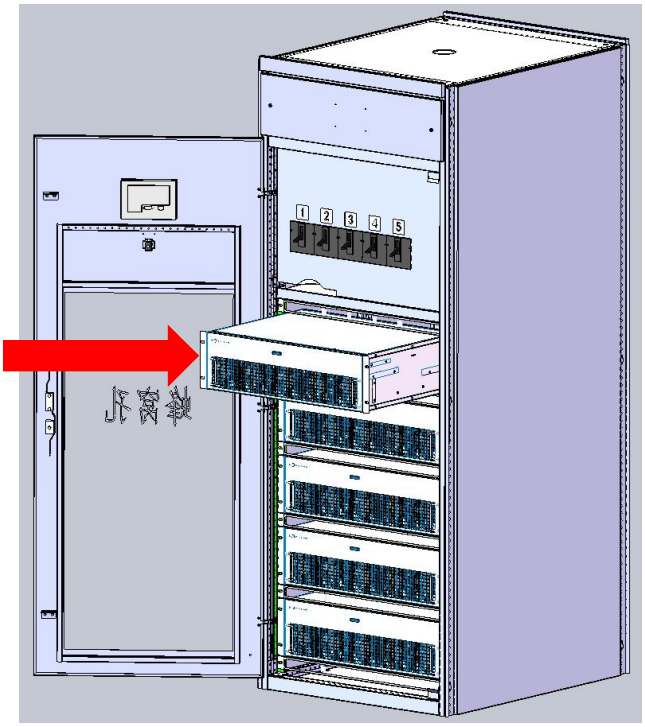

Fig.3-8 Schematic Diagram of Module Installation

Attention	● The weight of the module with 480mm wide is 27kg, and the weight of the module with 680mm wide is 44kg. The handling needs to be carried out with certain transportation equipment. At least 2 personnel should be lifted and installed during installation. ● Please handle the module when installing, and be careful not to bump the module, especially the touch panel on the front panel of the module.If it causes damage, it is not within the scope of the company's responsibility and warranty.

When the module is installed in the cabinet, our company will provide two mounting lugs for a single module to fix the front end of the module and the cabinet. In addition, our company proposes to install two guide beams on the left and right sides of the module to fix and support the module. The rear side of the module needs to be fixed. Refer to Fig. 3-10. The module and the guide beam are fixed together. (the mounting lug is provided by our company, but the guide rail beam is not provided by our company. It is recommended that the cabinet body be matched during

the production of sheet metal.)

NOTE

- The fixing and installation method of the module here is designed by the structural engineer of the company. It is easy to install, meets the requirements of mechanical strength, and is convenient for transportation, disassembly and maintenance.
- If the customer has other installation and fixing methods, as long as the mechanical strength and the installation space of the module are guaranteed.

Fixing diagram of mounting lug (provided by our company)

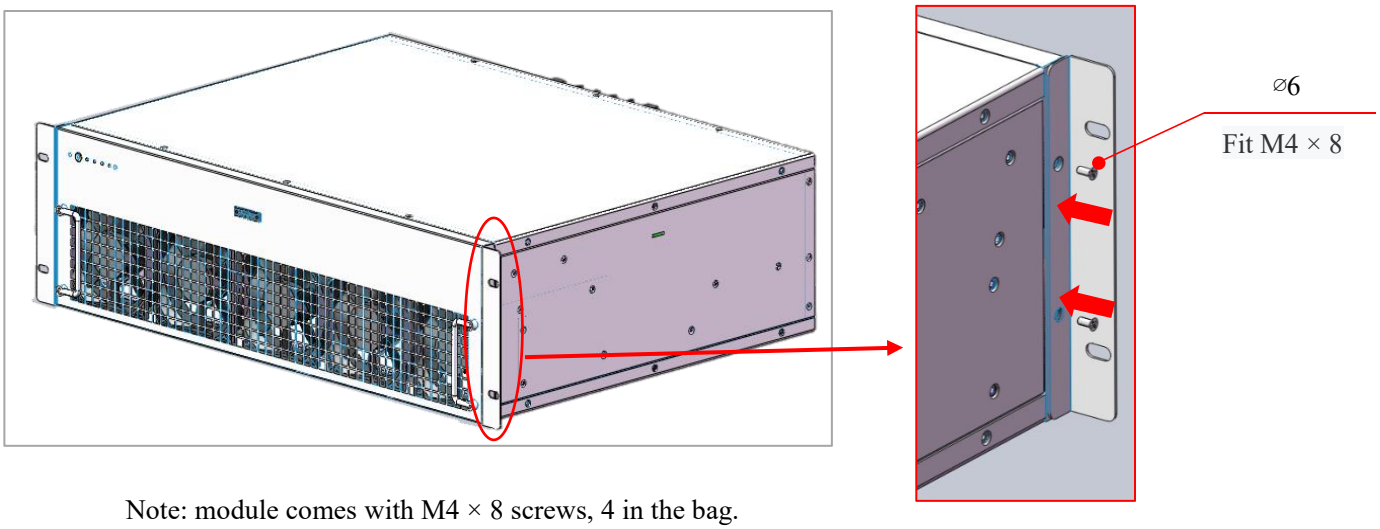

Note: module comes with M4 × 8 screws, 4 in the bag.

Fixing of mounting lug and cabinet

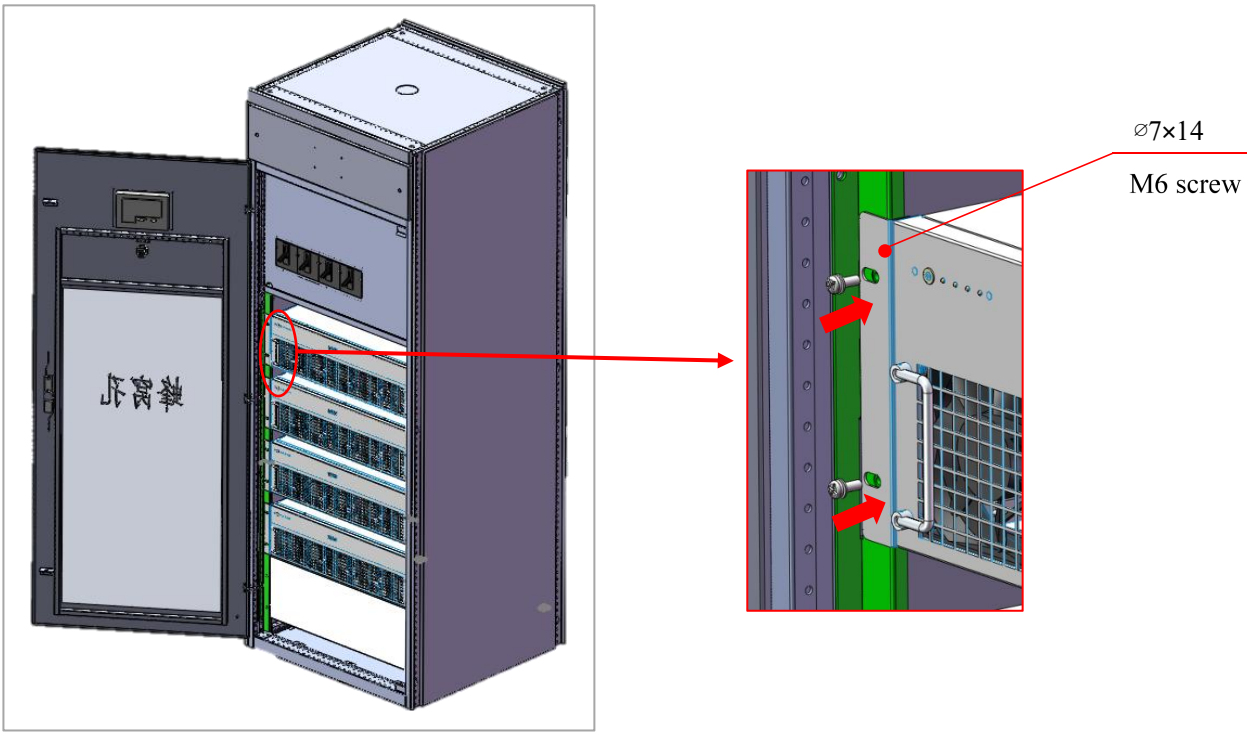

Note: M6 screws shall be provided by yourself..

Fig. 3-9 fixing diagram of mounting lug

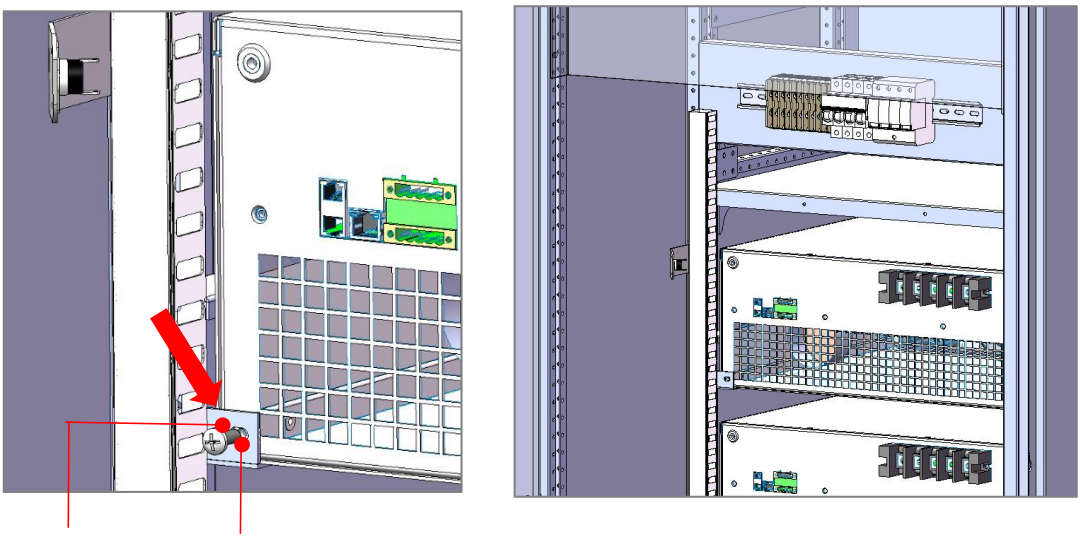

(The relevant installation accessories are not provided by our company)

Fig.3-10 Local Schematic Diagram of Module Installation and Fixing

(3)Installation of centralized monitoring touch screen

When the cabinet is installed, a 7-inch external centralized touch screen can be installed on the cabinet door to centrally monitor all the modules in the cabinet.The touch kit has mounting parts for fixing.In addition, the touch screen is equipped with a port adapter module of DB9 to RJ11, and a power port terminal.After the touch screen is connected to the module, the module supplies 24V power to the touch screen through the communication line, and no external power supply is needed.

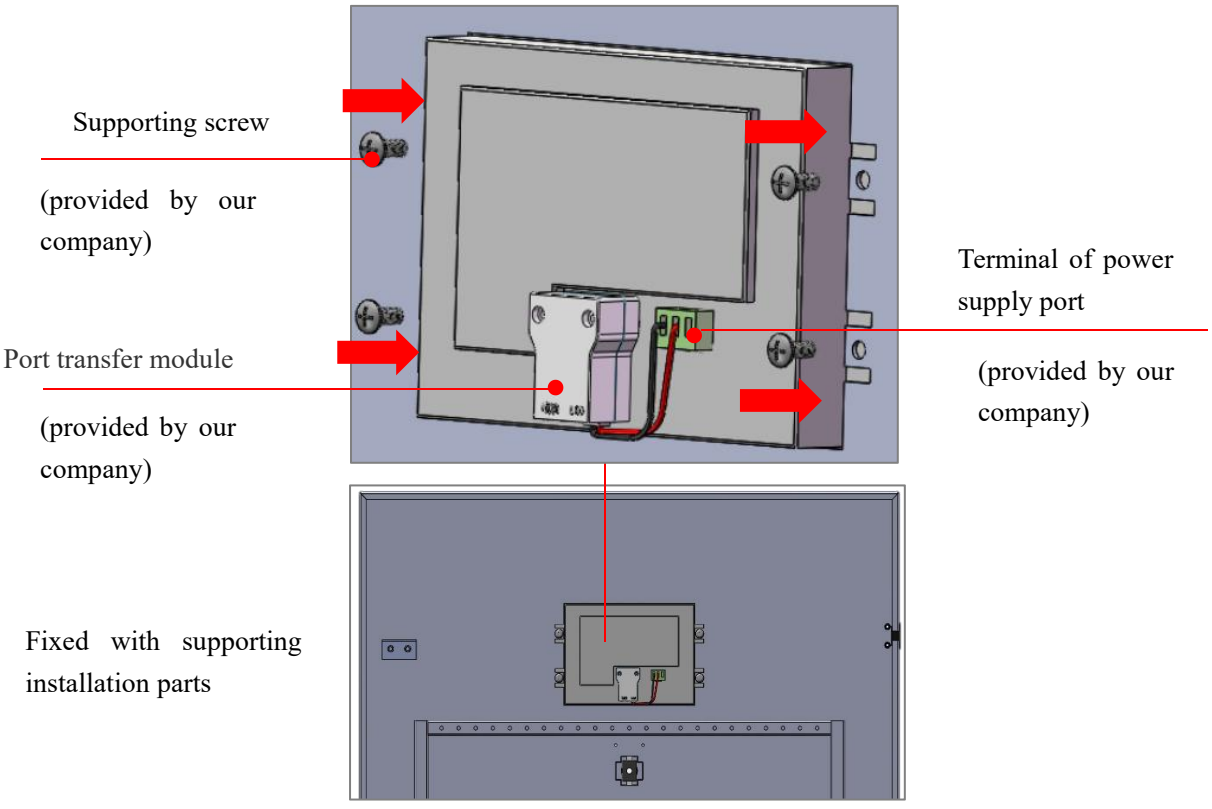

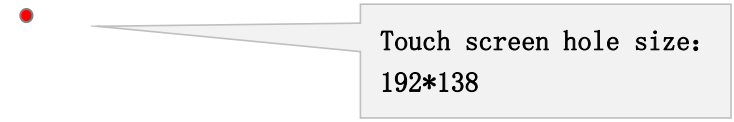

Fig. 3-10 Schematic Diagram of Touch Screen Installation

3.2.2 Wall-mounted installation

Wall-mounted modules are usually mounted on a wall or in a smaller cabinet. A pair of mounting ears are standard on the wall-mounted module, as shown.You can make a φ10 hole in the wall and fix it with the M8 expansion screw.

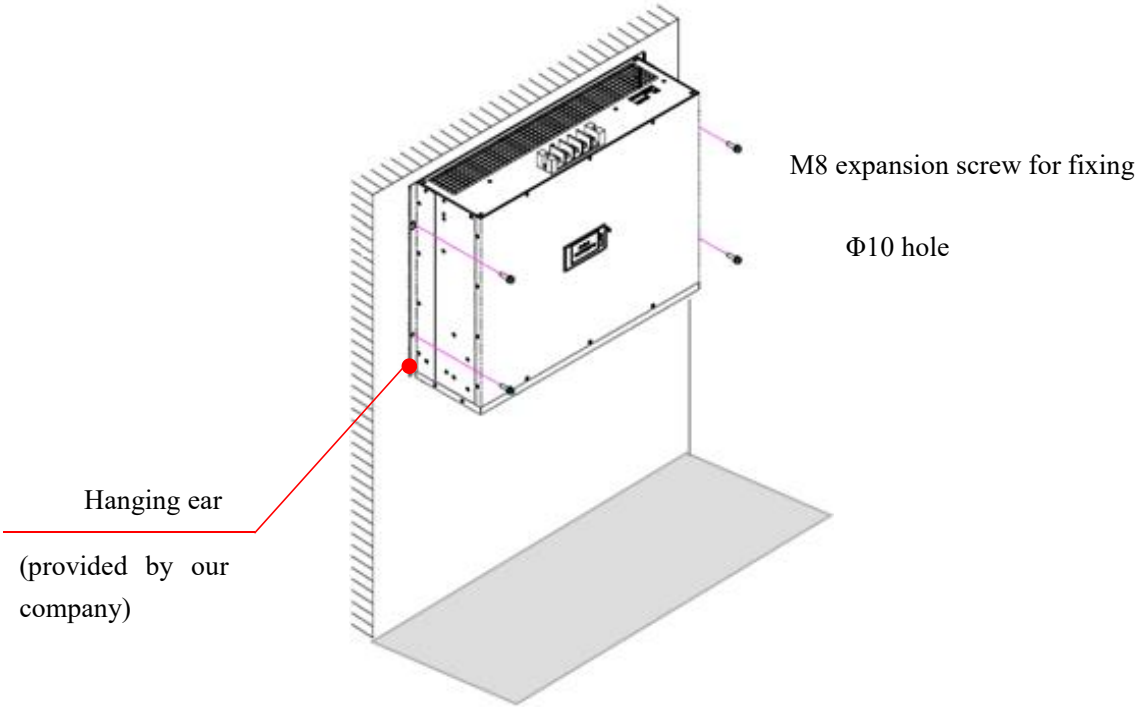

Fig.3-12 Schematic Diagram 1 of Wall-mounted Module

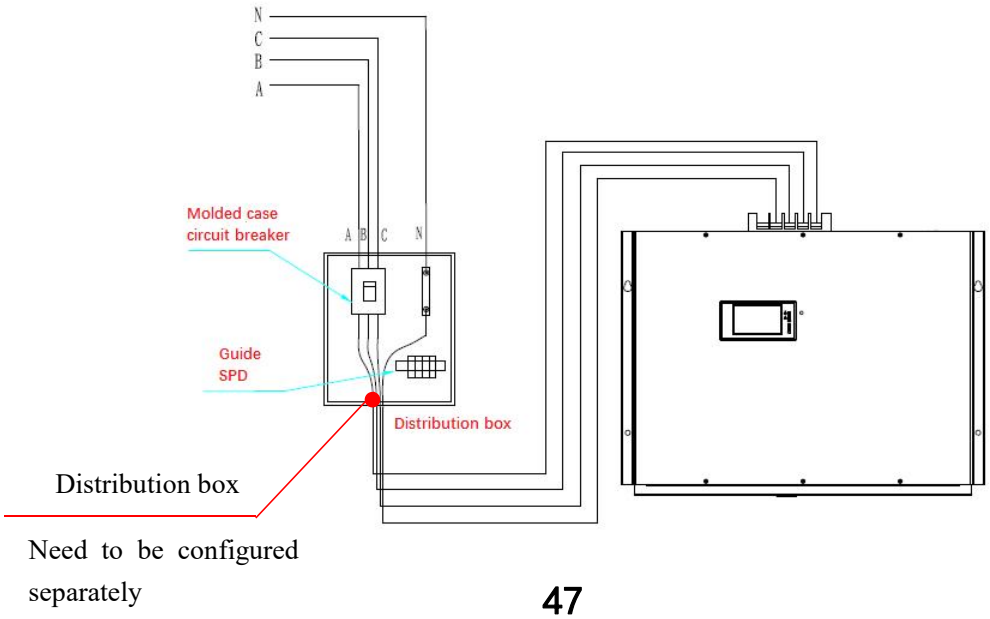

Fig.3-13 Schematic Diagram 2 of Wall-mounted Module

NOTE

- When installed by wall-mounted type, it cannot be directly connected to the power distribution system. It is necessary to add a molded case circuit breaker to turn on and off the power supply of the module, and an additional surge protector is needed to protect the module.Therefore, it is recommended to install a small distribution box to install the molded case short circuit and surge protector.
- Selection of distribution box

 Distribution box (wall mounted)	● Reference size (W*H*D)mm 300*400*200 (1 module) 400*500*200 (2 modules) 500*600*200 (3~4 modules) 600*800*200 (5~6 modules)

3.3 Wiring

3.3.1 Primary wiring

(1)Wiring diagram

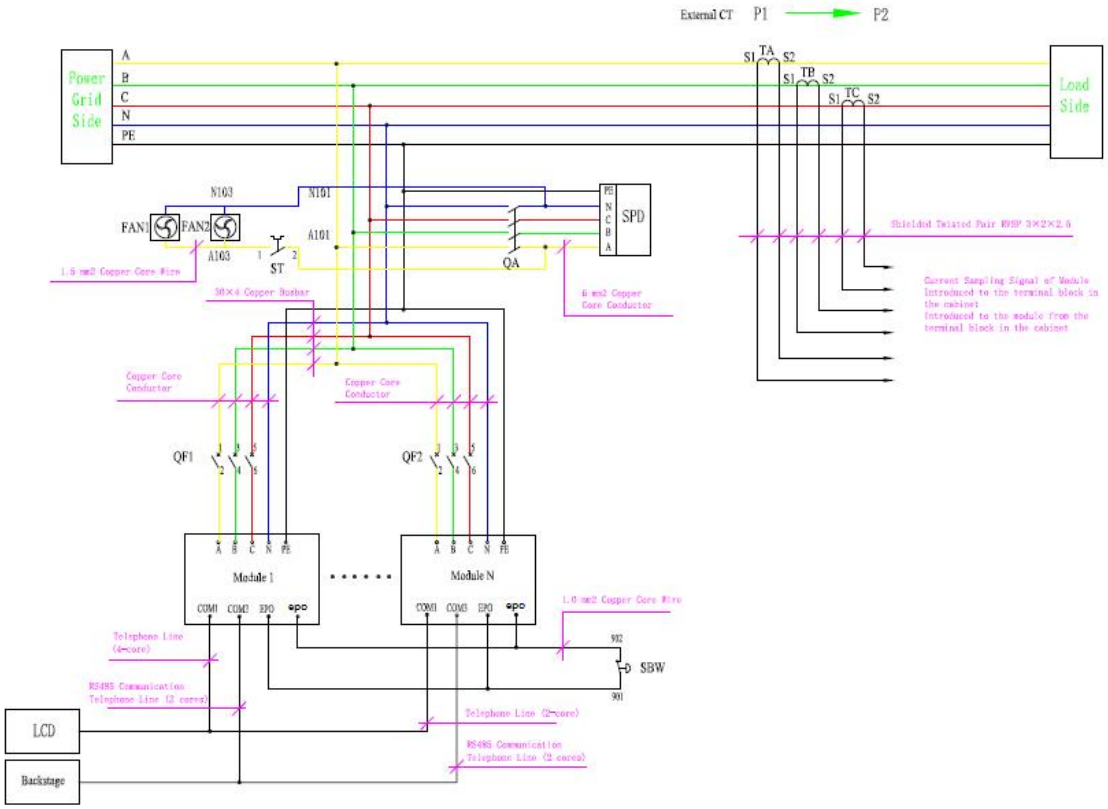

Fig.3-14 Schematic Diagram of Typical Wiring for Cabinet Type Installation

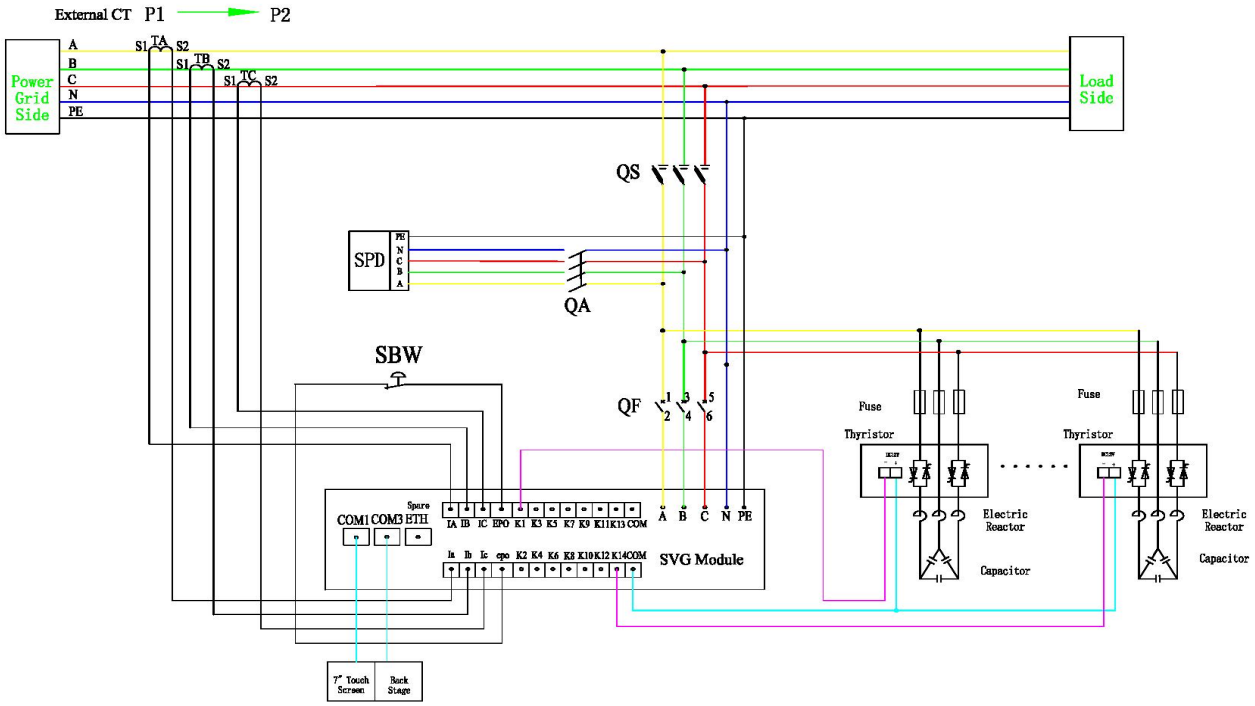

Fig.3-15 Schematic Diagram of Typical Wiring for H130mm

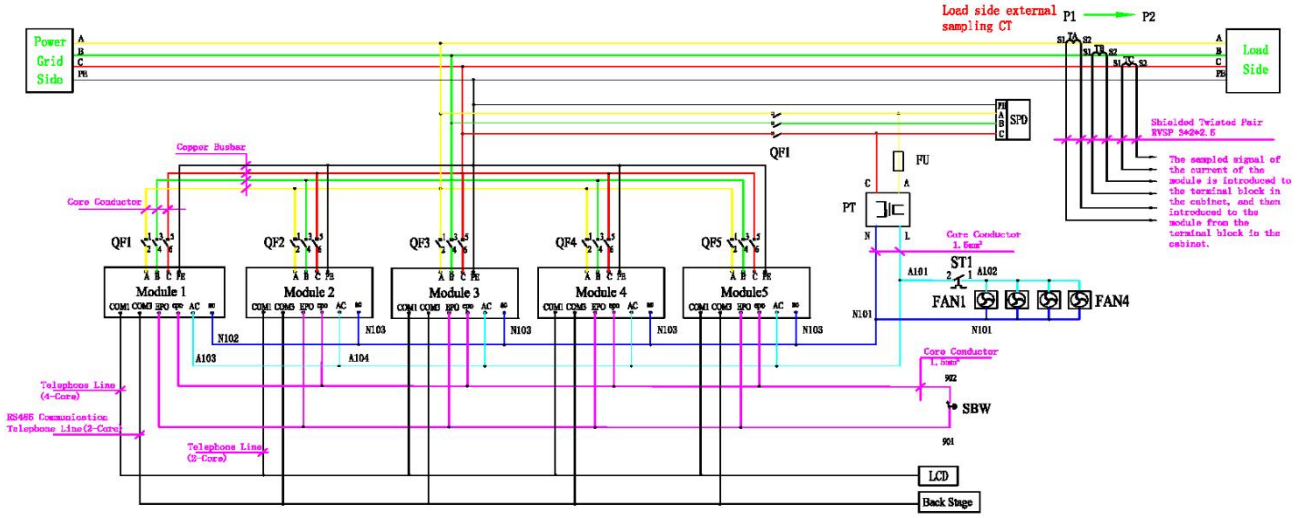

Fig.3-16 690V Schematic Diagram of Typical Wiring for 690V

NOTE

- This wiring diagram is a typical cabinet type wiring drawing. For detailed drawings, please refer to the engineering drawings in the company's supporting shipping materials, or contact the company to send electronic version of the engineering drawings.

(2) Instruction of primary terminal

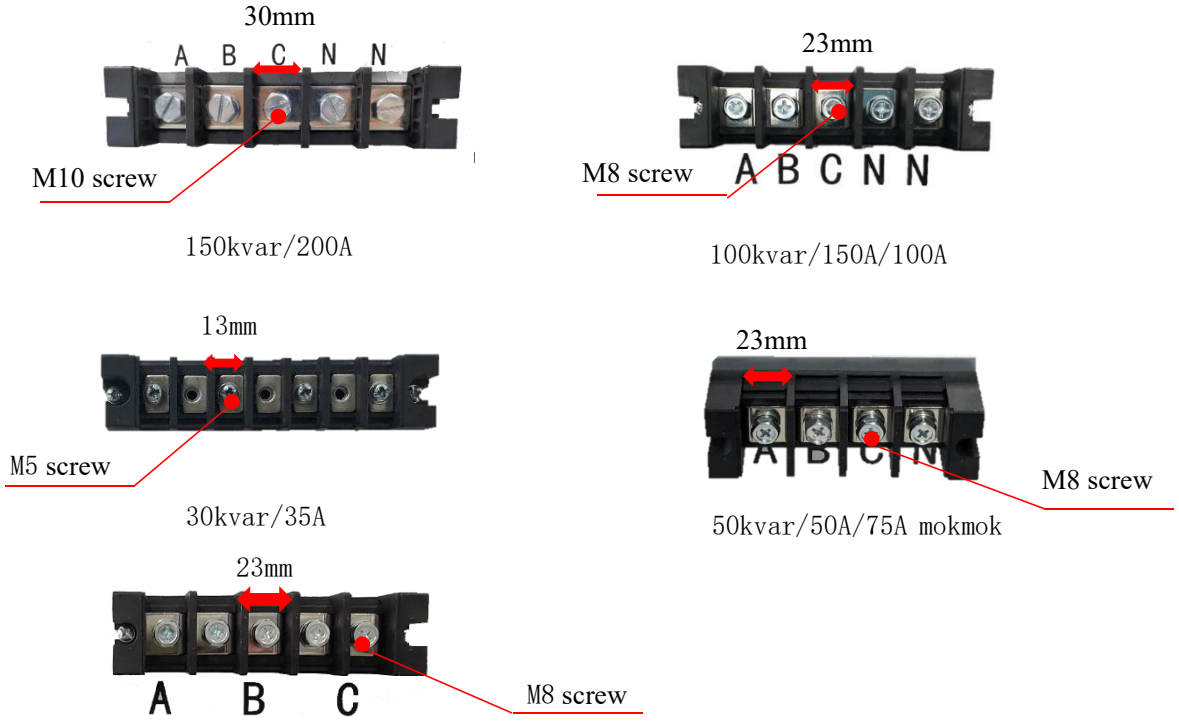

Fig.3-17 Diagram of primary terminal

NOTE

- Please select the appropriate primary cable copper nose according to the size of the primary terminal. The width of the copper nose should not exceed the width of the terminal.

(3) Primary cable/copper bar selection

Cable selection:

- The selection of APF/SVG incoming cable under different capacity and current levels shall be in accordance with electrical regulations and shall be selected in consideration of environmental conditions. The following table may be used as a reference:

Rated current of device	35A	50A、75A	100A	150A	200A
ABC three phase cable	16 ㎟	25 ㎟	35 ㎟	50 ㎟	95㎟
N-wire specification	25 ㎟	50 ㎟	50 ㎟	50 ㎟*2	95 ㎟*2

Note: APF is rated value for current, SVG is rated value for kvar, and the conversion relationship is 1kvar ≈ 1.5A.If it is an aluminum cable, it corresponds to the corresponding specification of copper wire.

- The cable is usually made of BVR multi-strand copper core PVC insulated soft wire.
- If the current is relatively large, two pairs can be used according to the situation;

- **Zero line (N line)**: Generally, the choice is the same as the phase line.In the case where the three-phase unbalance or the third harmonic is large, it is recommended to select a larger cable for the N line because the current at the N line is larger.If the N line has an accurate current value in the actual item, the N line specification can be selected according to the current.
- **Grounding cable (PE wire)**: yellow-green BVR multi-strand copper core cord; when the AC phase wire diameter S<16mm2, the wire diameter is the same as the phase line; the phase wire diameter is 16≤S≤35mm2, and the protective ground wire The diameter is 16mm2; the phase line S>35mm2, half of the phase wire diameter is selected as the wire diameter of the protection ground wire.

Reference of copper bar selection:

Rated current of device	150A below	150A~300A	300A~600A	600A~900A
Specification of copper bar	15*3	30*4	50*5	60*8

3.3.2 Wiring of centralized monitoring touch screen

The external centralized touch screen is connected and communicated through the COM1 port on the back of the module. The fixed components, the port adapter module and the communication cable are standard accessories.One end of the communication line is inserted into the module com1 port, and the other end is inserted into the port port adapter module on the back of the touch screen.The touch screen power is obtained from the COM1 port of the module, and no external power supply is required.

The 15V power supply for the touch screen is obtained from the com1 port of the module through the communication cable, and no other external power supply is required.

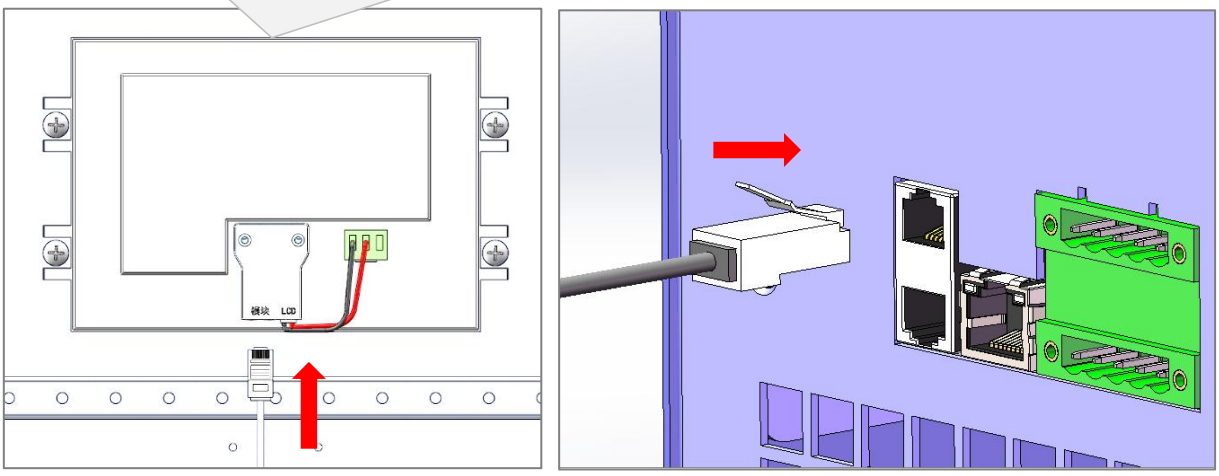

Wiring of touch screen (Communication line provided by our company) Wiring of module

Fig.3-18 Wiring Diagram of Communication Line for Centralized Monitoring Touch Screen

3.3.3 CT Wiring

（1）Position and direction of CT

The APF/SVG is installed in parallel in the system. The current transformer CT can be installed on the grid side or the load side at any time. On the monitoring touch screen, the CT position can be set to the grid side or the load side according to the installation condition.

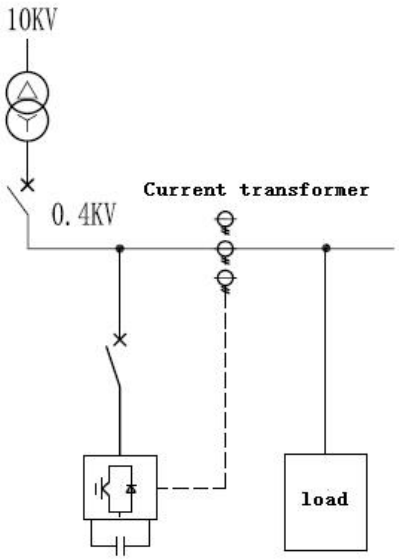

A:Load side sampling of single module

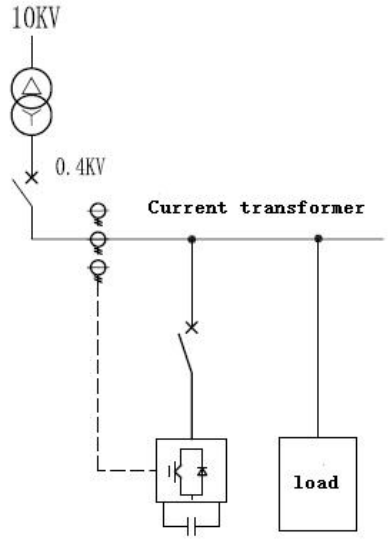

B:Grid side sampling of single module

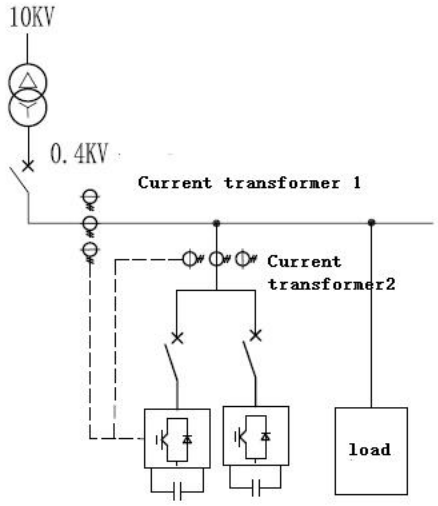

C:Grid side sampling of multi-modules

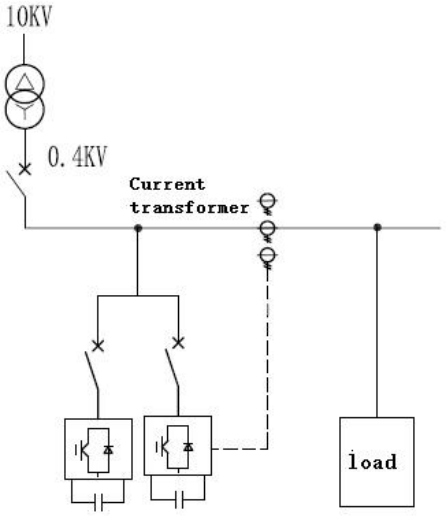

D:Load side sampling of multi-modules

Fig.3-19 Schematic Diagram of CT Sampling Solution

■ **Single module**

When the APF/SVG single module is connected to the system, the CT position can be installed on the grid side or the load side as shown in Figures A and B.

■ **Multiple modules**

When the multi-module parallel system is connected to the system, the sampling grid side and the sampling load side are different, and the sampling load side wiring is more convenient.
Load side sampling: Multi-module parallel sampling of the load side, only a set of CT is required as shown in Figure D.
Grid side sampling: When multi-module parallel sampling of the grid side, it is necessary to add the device ct in the APF/SVG cabinet to sample the current output by the module itself, and then subtract the parallel connection between the grid ct signal and the device ct signal to obtain the load side current signal. As the final sampling signal is input into the module, the sampling signal is connected in series between the module and the module as shown in Figure C.

■ **APF mixed with capacitance compensation**

When APF is used together with capacitive reactance compensation equipment, the principle is that the main line of the APF is closer to the load than the capacitor, because the APF compensates the harmonics, so that the APF access point is in the direction of the grid side, and the current after compensating the harmonics flows. Basically, the fundamental wave is mainly used to improve the service life of the capacitor.The ct position can be placed on the grid side or on the load side.

Attention Warning	● When APF/SVG is used for harmonic compensation, it can not be used with pure capacitor. Reactors must be connected in series to make the harmonics of the required compensation times sensitive and avoid resonance. Otherwise, APF/SVG failure or pure capacitor compensation equipment damage may be caused.

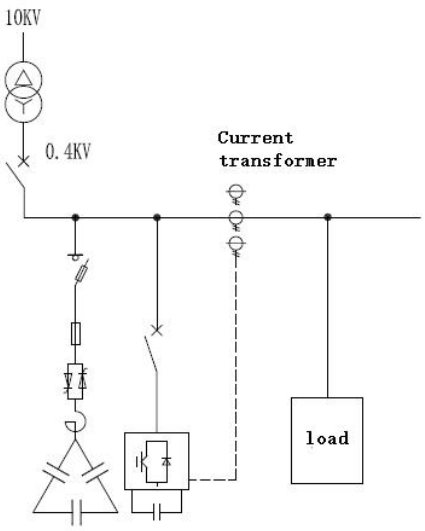

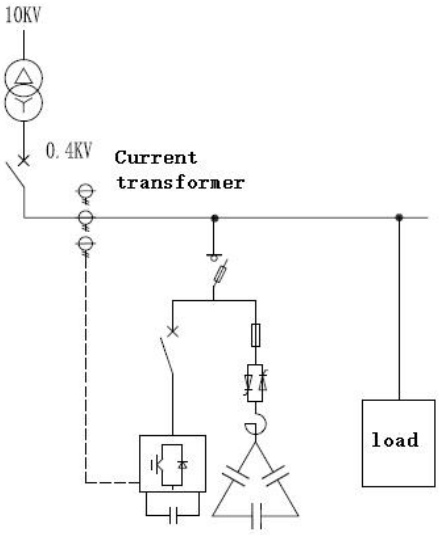

Fig3-20 Schematic Diagram of CT Sampling Position Fig.3-21 Schematic Diagram of SVG CT Sampling

Position

■ **Use SVC mixed with capacitor compensation**

When SVG is used together with a capacitive reactance compensation device, the principle is that the SVG sampling signal contains a capacitor compensation current, and the capacitive reactance sampling signal does not include the SVG current but contains the current of its own output.Since the cost of the capacitor is lower, the capacitor generally compensates for most of the reactive power, and SVG compensates for the remaining reactive power.Only the SVG Sampling CT is installed on the grid side, the sampling signal contains the current of the capacitor compensation output, and SVG can detect the residual reactive power after the capacitor reactance compensation.At the same time, the sampling signal of the capacitor compensation device must be placed on the grid side, so when SVG is used together with the capacitor compensation, CT must be placed on the grid side.

NOTE

● When SVG is mixed with capacitor compensation equipment, it can be configured with the hybrid compensation controller produced by our company. It monitors the state of the capacitor compensation equipment, SVG module and setting parameters, and the operation is simple and convenient.

The installation direction of CT: P1 faces the grid and P2 faces the load.

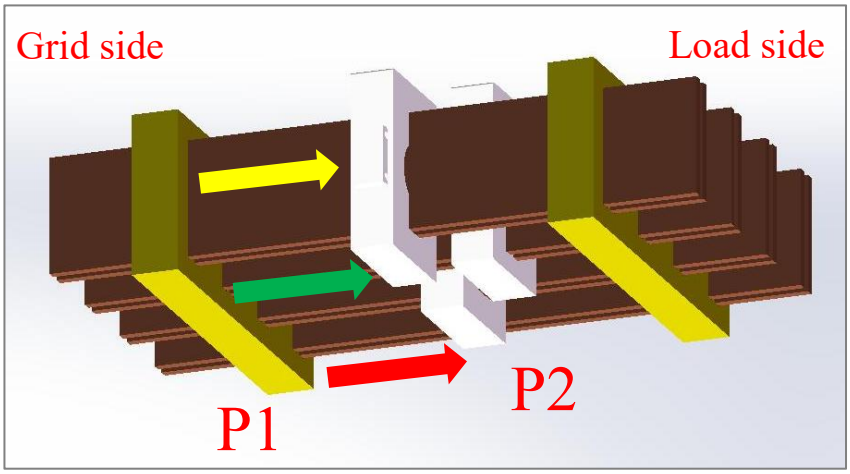

Fig.3-22 Schematic Diagram of Current Transformer P1P2 Direction

NOTE

● If the flow direction of the CT current is from P1 → P2, then S1 is + and S2 is -; otherwise S1 is - and S2 is +.

（2）Wiring

Attention Warning	**If the current transformer is not connected properly, the electric shock may be fatal due to the open circuit!** ● Refer to the wiring drawing for sampling CT installation and wiring. If you have any doubts, please contact our technology. ● The CT installation wiring of APF/SVG must be carried out by trained and qualified engineers in accordance with the "Electrical Law". It is strictly forbidden to install other personnel in violation of regulations. This manual only describes the basic contents of the installation. For details of installation, please refer to the electrical code. ● Before installing the primary side of the current transformer, firstly use the separate short-circuit terminal to short-circuit the secondary side. Otherwise, the current transformer in the open state will generate high voltage on the secondary side. ● Make sure the current transformer is short-circuited until the CT connection terminals of APF/SVG are connected. ● Before the current transformer is separated from the APF/SVG, it is short-circuited with a detachable short-circuit terminal.

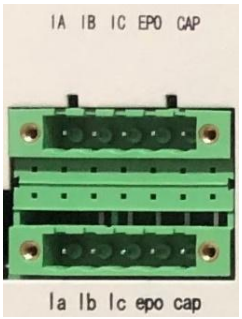

IA：A phase S1　IB：B phase S1
IC：C phase S1

Ia：A phase S2　Ib：B phase S2
Ic：C phase S2

Fig.3-23 Schematic Diagram of Secondary Terminal of Module and CT Cable Access

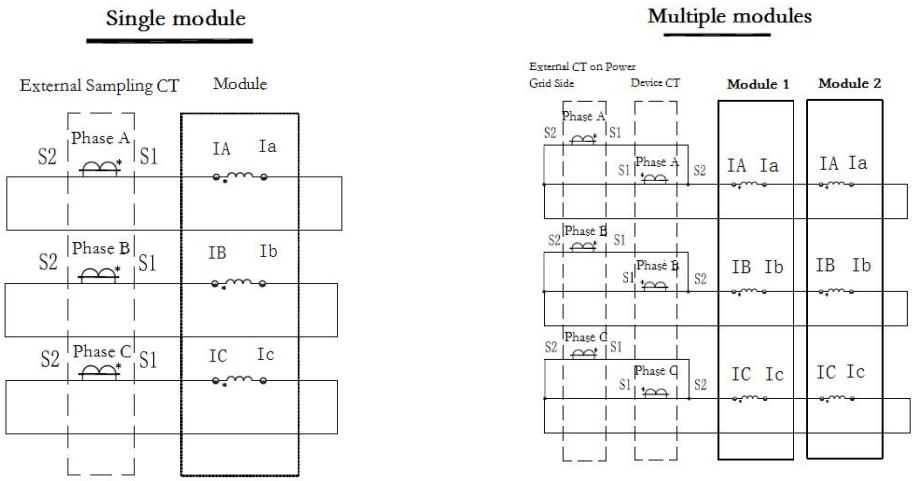

Fig.3-24 Schematic Diagram of Typical CT Wiring

Grid side sampling: When multi-module parallel sampling of the grid side, it is necessary to add the device CT in the APF/SVG cabinet to sample the current output by the module itself, and then subtract the parallel connection between the grid CT signal and the device CT signal to obtain the load side current signal. As the final sampling signal is input into the module, the sampling signal is connected in series between the module and the module as shown in Figure 3-22.
The CT cable is a 2.5mm^2 shielded twisted pair cable RVSP2×2.5 (line length L<15m), or a 4mm^2 shielded twisted pair cable RVSP2×4 (line length 15m<L<30m).

3.3.4 Wiring of emergency stop switch

When the APF/SVG cabinet is installed, an emergency stop switch is usually installed on the cabinet door.When an abnormal situation occurs in the cabinet or the module (smoke, abnormal noise, flare), the emergency stop switch can be pressed immediately to stop the module and effectively protect the module.

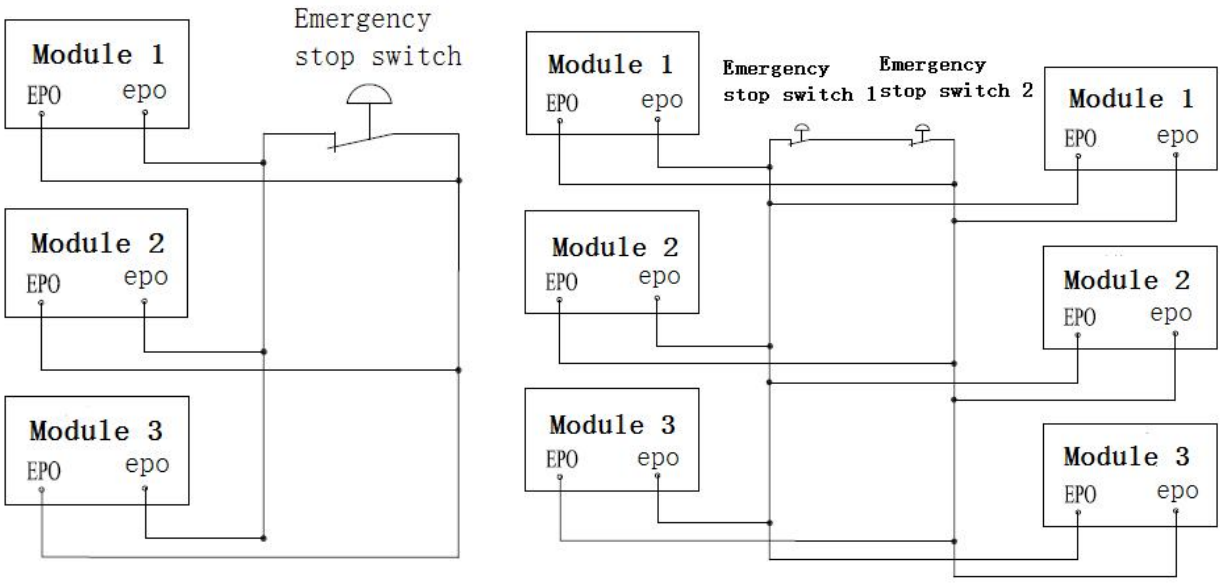

Multiple Modules Parallel Machine Multi-module parallel machine for main and auxiliary cabinet

Fig.3-25 Wiring Diagram of Emergency Stop Switch

In the multiple modules parallel machine: each module EPO,epo is connected to the emergency stop switch and connected to the normally closed signal.
In the main and auxiliary cabinet: the main and auxiliary cabinet is connected to an emergency stop switch.The emergency stop of the main cabinet is connected in series with the emergency stop of the auxiliary cabinet, and then connected with each module.When any cabinet in the main and auxiliary cabinets is pressed, all modules are immediately stopped when the emergency stop switch is pressed.

Attention	● The emergency stop switch is not required to be installed. If it is not installed, the EPO and epo ports should be carried out by short circuit.

3.3.5 Wiring of status indicator

When the APF/SVG cabinet is installed, the status indicator can be installed in the cabinet door.The module's CAP and cap ports are a pair of dry nodes that can be connected to a status indicator via a 220V relay.The wiring is shown in Figure 3-24.

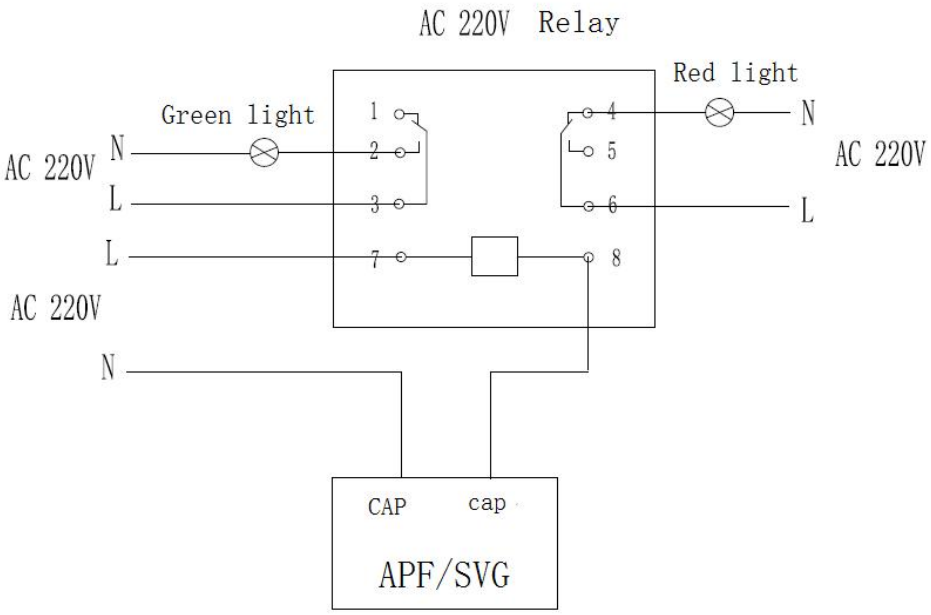

Fig.3-26 Schematic Diagram of Status Indicator Interface

The status can be divided into two types:

(1) The green light is on during operation and the red light is on stop.

(2) Green light at normal time, red light when fault occurs.

The port can represent two states, run/stop or normal/fault, and the meaning of the port output signal can be set according to the need through the touch screen. .For details, see the output Settings in Chapter 6 Settings.



Chapter Four Operation Guide of ON/OFF Machine

4.1 Start-up procedures·····59
4.2 Shutdown procedures·····60
4.3 Automatic start-up·····60

Chapter Four Operation Guide of ON/OFF Machine

4.1 Start-up Procedures

4.1.1 Check the wiring

（1）Check whether the connection between the bus bar and the circuit breaker, and between the circuit breaker and the equipment is obviously wrong in phase sequence. If any problem is found, change it in time.
（2）Check whether the bus bar of the device is securely connected or loose. Ensure that the bus bar is securely connected.
（3）Use a multimeter to check whether there is a short circuit between A,B,C, N,P.
（4）Check whether the CT wiring is wrong and whether the terminals at both ends of the terminal block correspond to each other. If not, rectification must be made.

4.1.2 Check the communication

（1）When the above process is in order, turn off the emergency stop switch and close the circuit breaker.
（2）Check whether the communication status indicator on the front of the module is on and blinking normally. If the indicator is not blinking or off, it indicates that the communication is faulty. If the parameters on the touch screen are displayed in gray, check whether the address dip switch of each module is correctly set. If the address dip switch of each module is set to 1, the communication cannot be guaranteed. Set the address dip switch of each module in the cabinet in order of 1, 2, 3, and 4 from top to bottom. If there is still a communication problem, contact the manufacturer to solve the problem.
（3）The login permission page is displayed. Select the login identity and enter the password to log in.
（4）The page for setting parameters is displayed. In this interface, users set related parameters, such as: CT ratio, CT position, number of parallel channels, compensation mode, turn on the corresponding compensation switch and so on.

4.1.3 Check the parameters

（1）When all parameters have been entered, click on the upper left corner of the touch screen to return to the main page. Click single channel in the upper right corner of the screen (if multiple modules are connected in parallel, multiple channels are displayed) to check whether the parameters on this screen are consistent with the previous input. If they are inconsistent, enter them again until they are consistent.
（2）Check whether the parameters displayed on the home page are consistent with those displayed in the system. If the power factor, active and reactive power display is not correct (such

as the power factor is very low, active and reactive power a phase or two phase is negative), it may be a problem with CT wiring, need to contact the manufacturer in time to solve.

 **Warning**	● When the APF/SVG start-up procedure is executed, the APF/SVG output terminal will be powered. ● If the load is connected to the APF/SVG output terminal, please confirm to the user whether it is safe to supply power to the load.If the load is not ready to accept power, do not isolate the load from the APF/SVG output terminals.

4.2 Shutdown Procedure

There are two ways to shut down, one is to directly disconnect the circuit breaker between APF/SVG and the mains, and the device is in the power-off state; the other way is to click the touch screen "click to shut down" and then disconnect the circuit breaker.In the shutdown state, APF/SVG blocks the IGBT trigger pulse and the device is in the non-compensated mode state.It is important to point out that after APF/SVG is powered off, do not disassemble the module immediately. The capacitor inside the module must be completely discharged before operation. The discharge time is about 10 minutes.

 **Warning**	● To prevent personal injury, if you want to repair or turn on the chassis after shutdown, please use a multimeter to measure the voltage at the input to ensure that there is no access to the mains. ● The module unpacking must be operated 10 minutes after the power is turned off (the internal storage capacitor of the module is discharged for about 10 minutes).

4.3 Automatic Start-up

If the system is powered off or the voltage and frequency are abnormal, APF/SVG will automatically shut down and stop outputting the compensation current.After the following conditions are met, it is not necessary to operate APF/SVG to automatically restart to compensate.

- Mains returned to normal
- APF/SVG is powered on before power down
- Automatic start delay after 20s

If APF/SVG is not powered on, the user can manually start APF/SVG through the touch screen control panel.



Chapter Five Operation Guide of Large Screen

5.1 Main menu·····62
5.2 System parameter·····63
5.3 login interface·····64
5.4 Set interface·····65
5.5 Bar chart interface·····69
5.6 Waveform interface·····69
5.7 History Alarm·····70
5.8 Warnning·····70
5.9 SET-TSC·····71

Chapter *Five* Operation Guide of Large Screen

When a module is placed in a cabinet, an external touch screen can be installed on the front door panel of the cabinet body to facilitate setting and viewing parameters. The external touch screen can be divided into 7 inches large screen and 4.3 inches small screen. The following is about the operation of the 7-inch screen.

5.1 Main Menu

After the device is powered up, the screen is in the startup state and the startup process lasts for about ten seconds.After the startup is successful, if the system is normal, the main status of the device can be seen as shown in Figure 6-1.

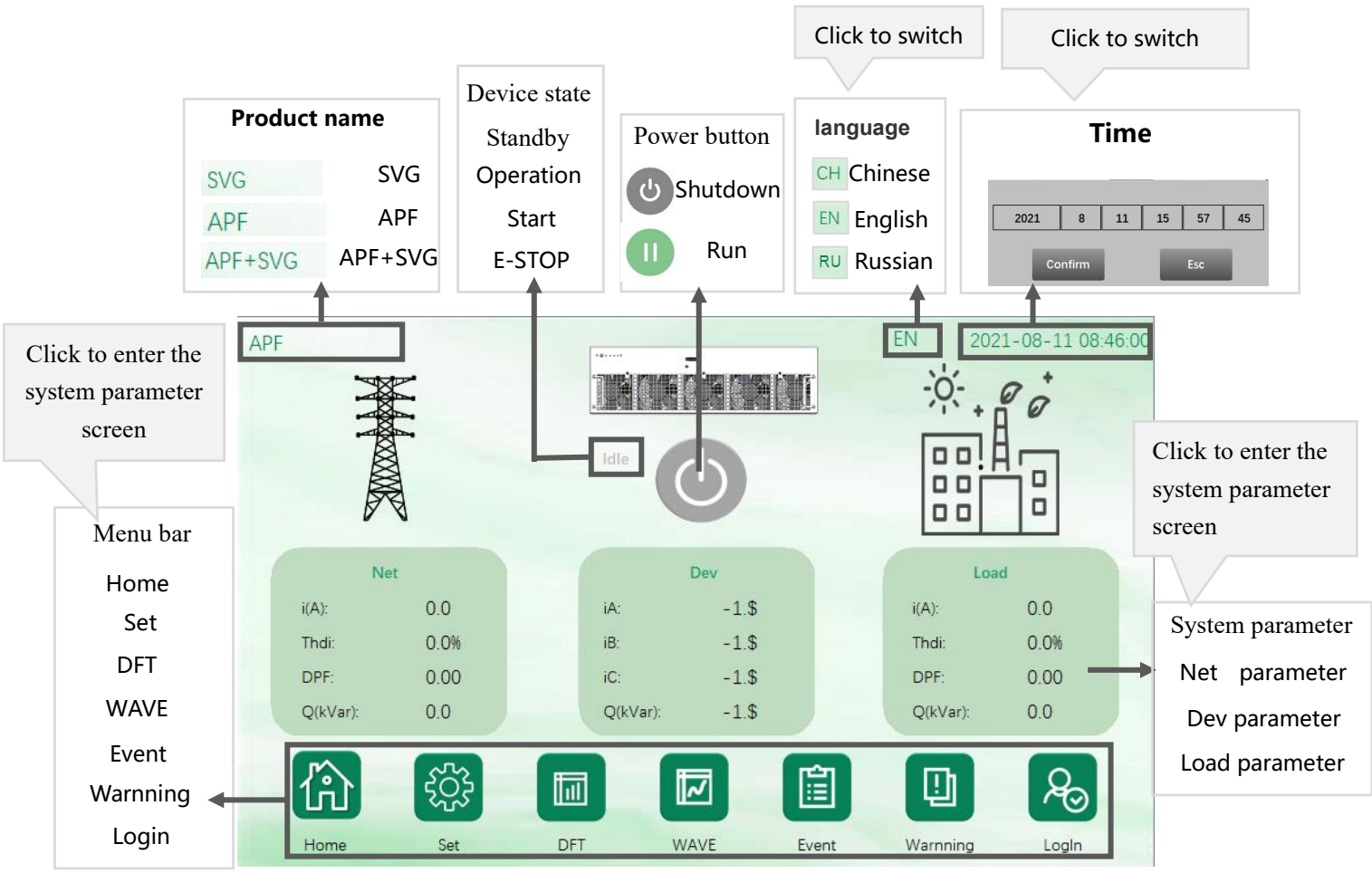

Fig.5-1 Main Menu

5.2 System parameter

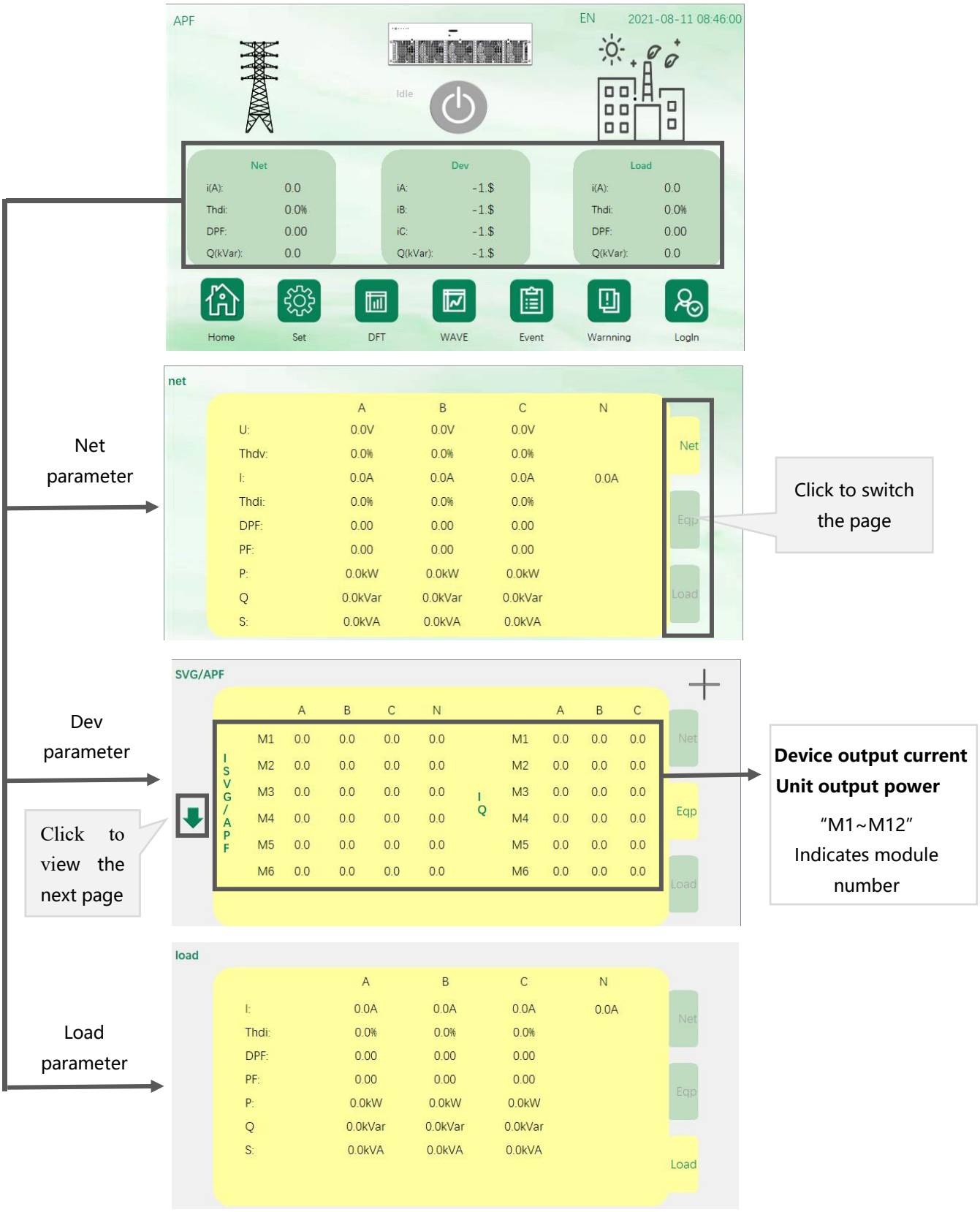

Fig.5-2 System parameter

5.3 **login interface**

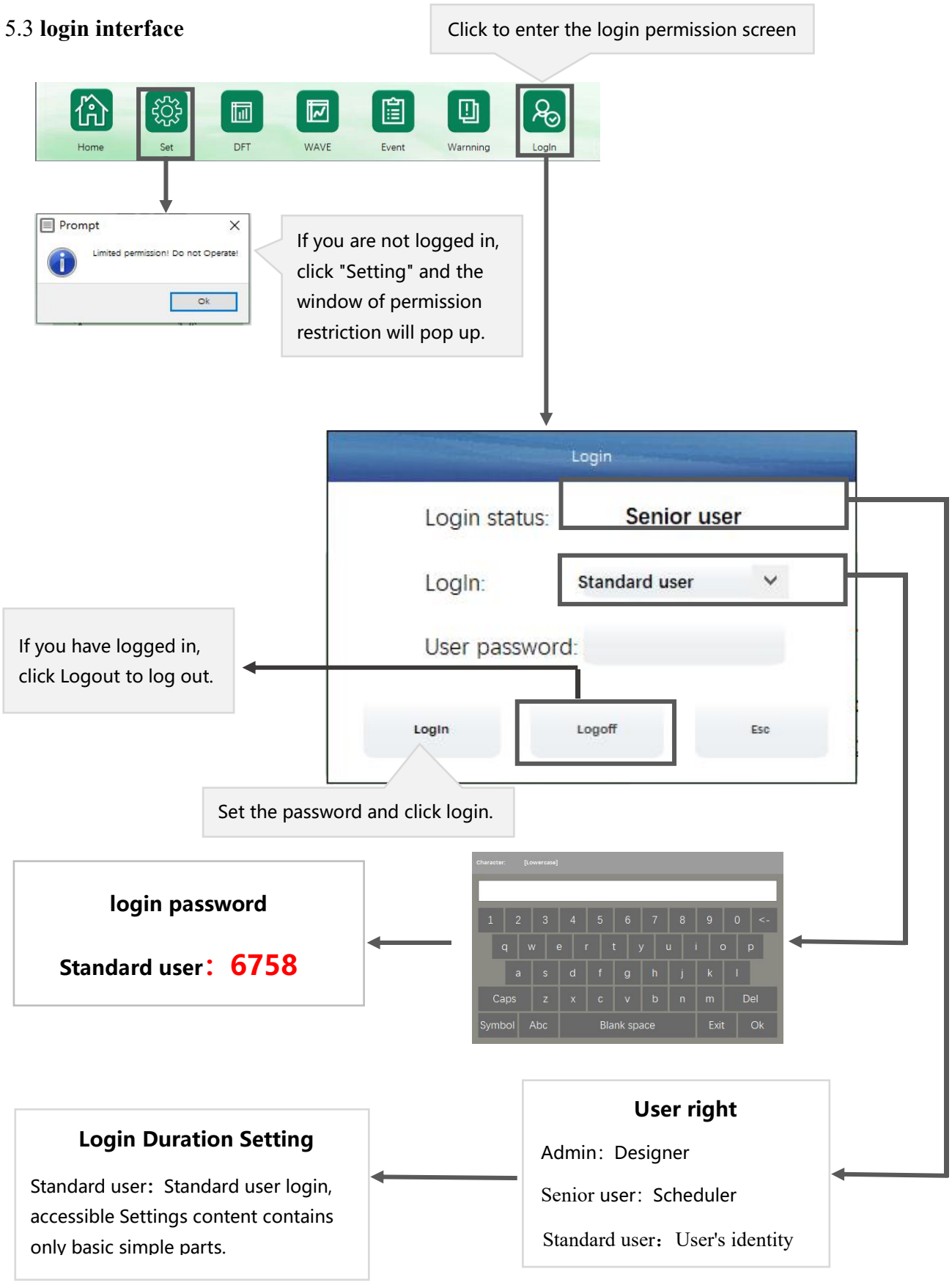

Fig. 5-3 login interface

5.4 Set interface

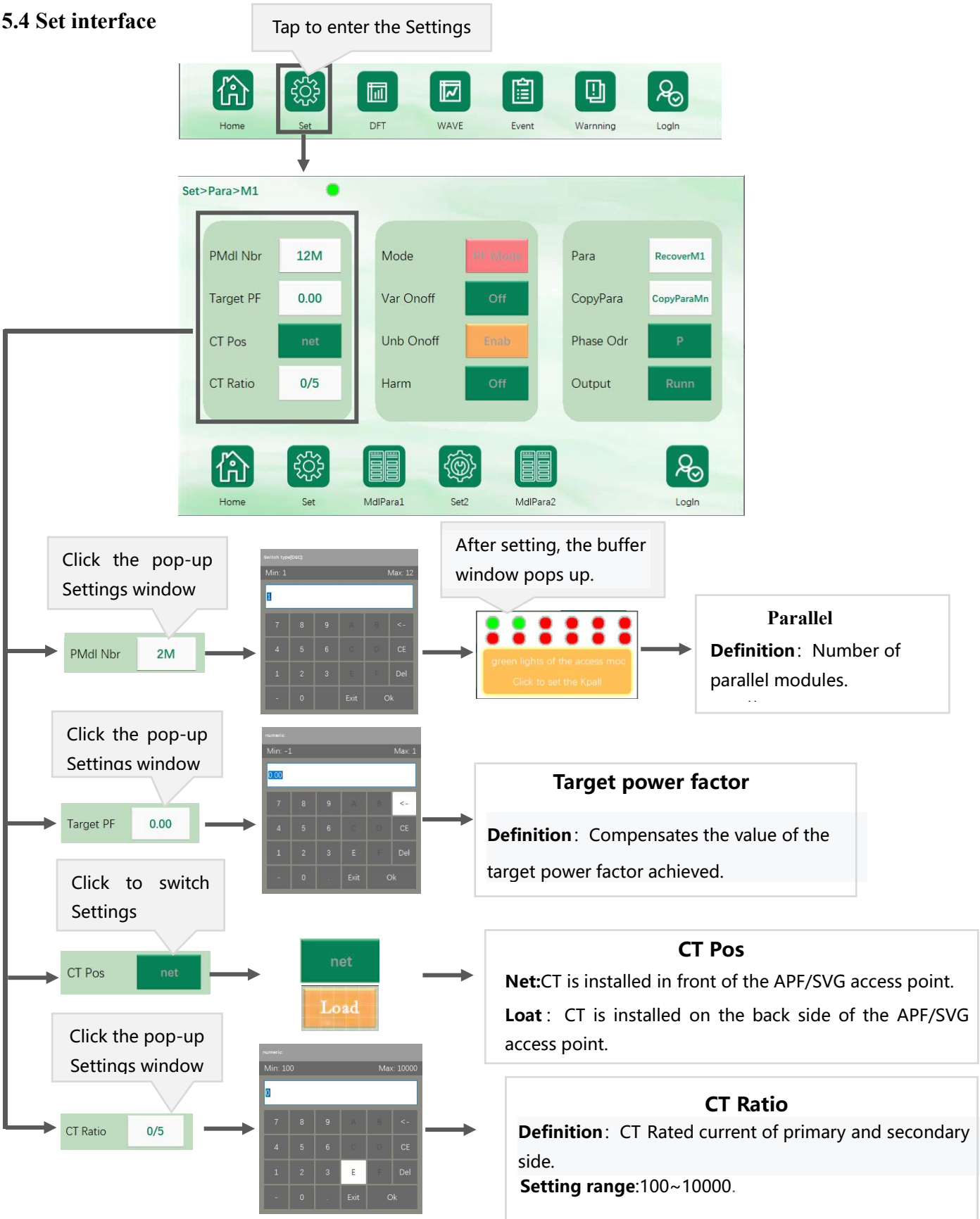

Fig. 5-4 Set interface

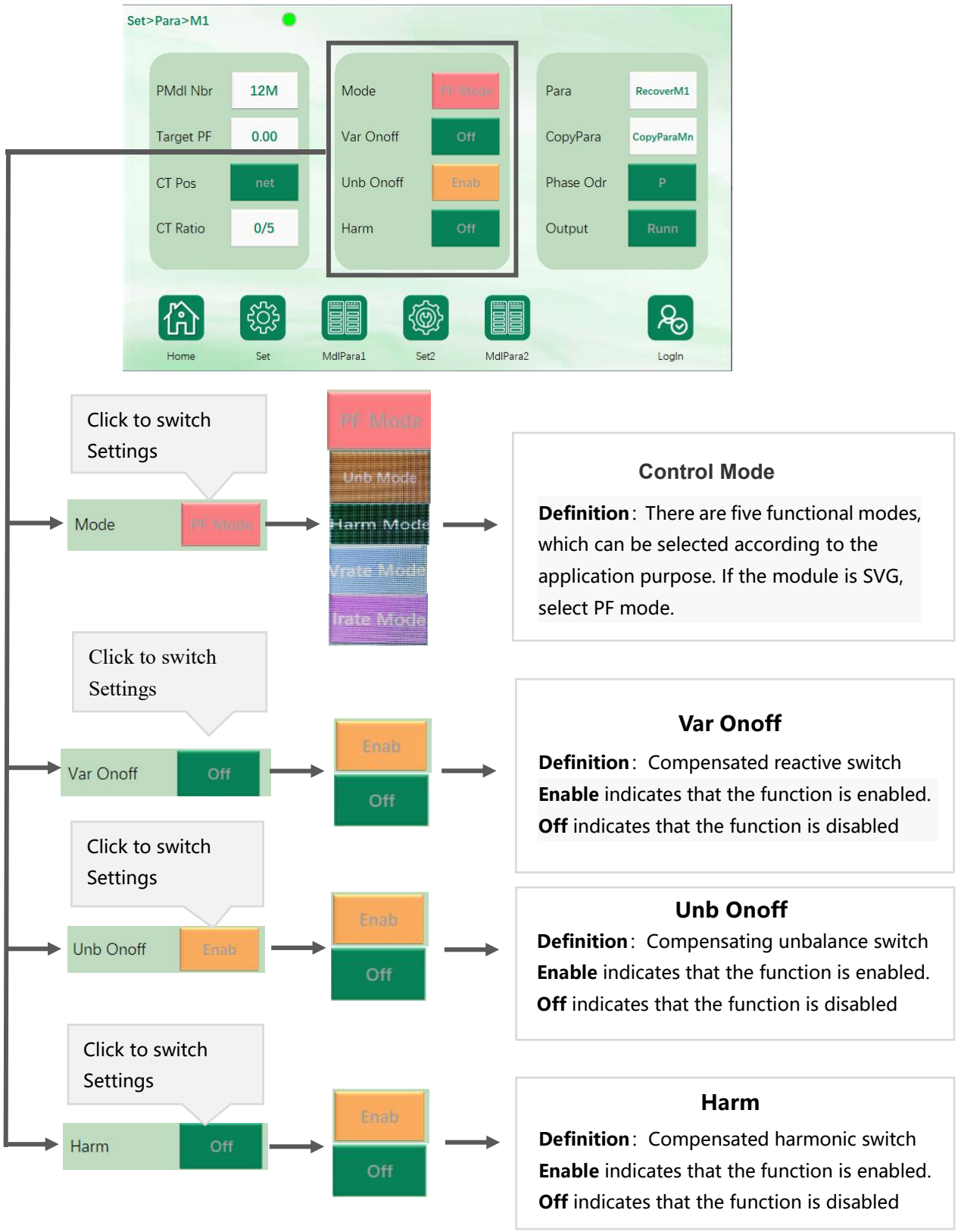

Fig. 5-5 Set interface2

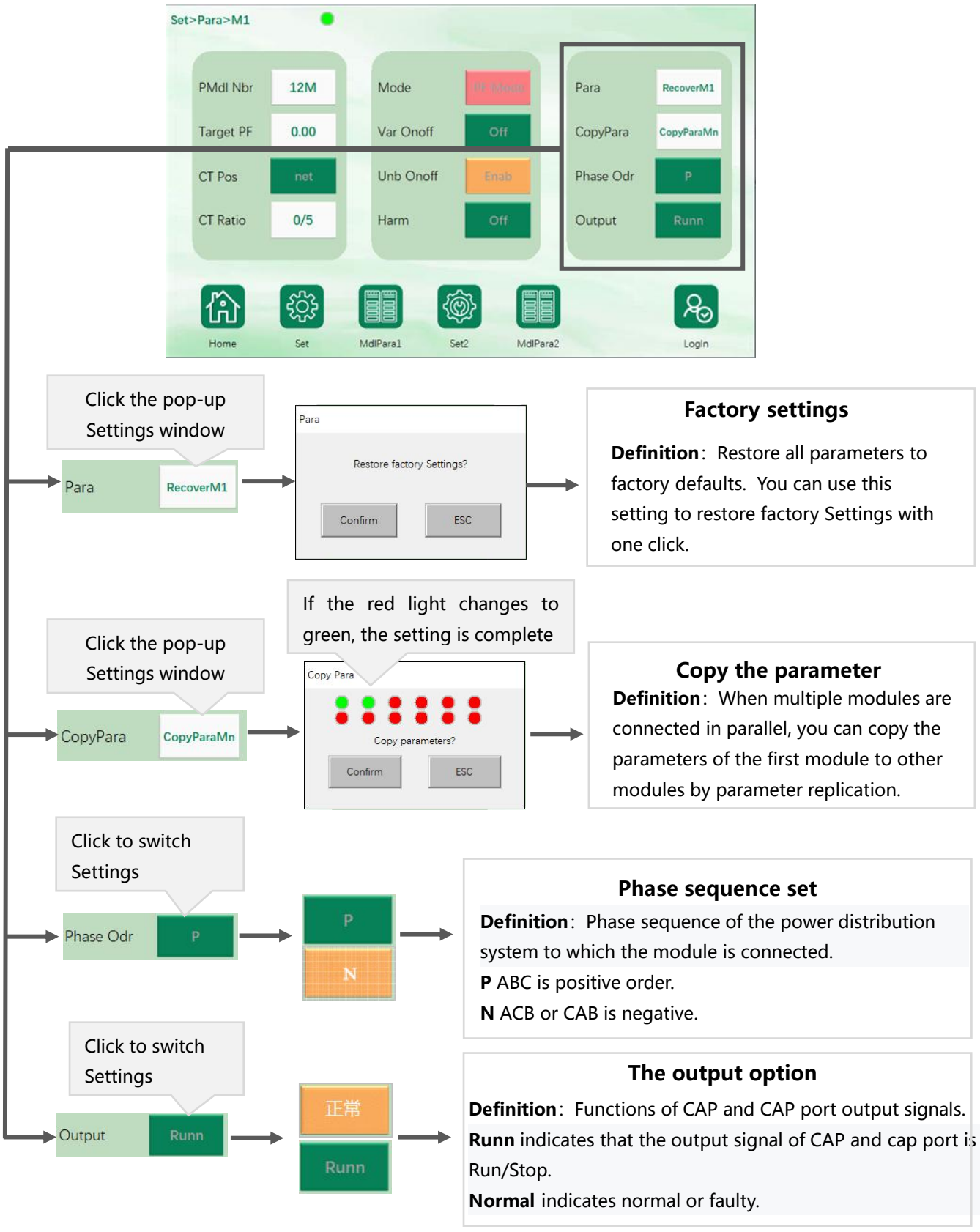

Fig. 5-6 Set interface3

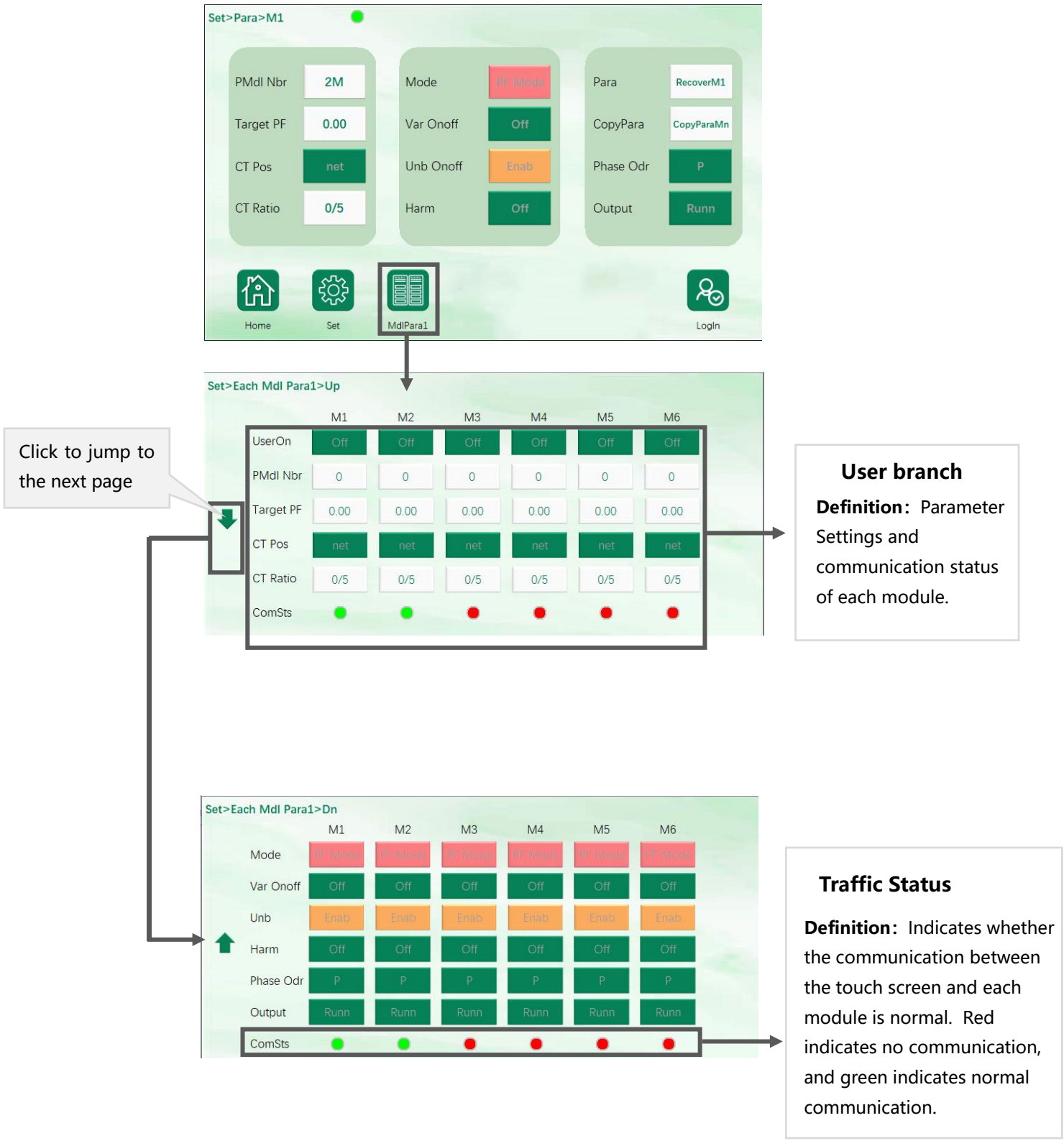

Fig. 5-7 Set interface4

5.5 Bar chart interface

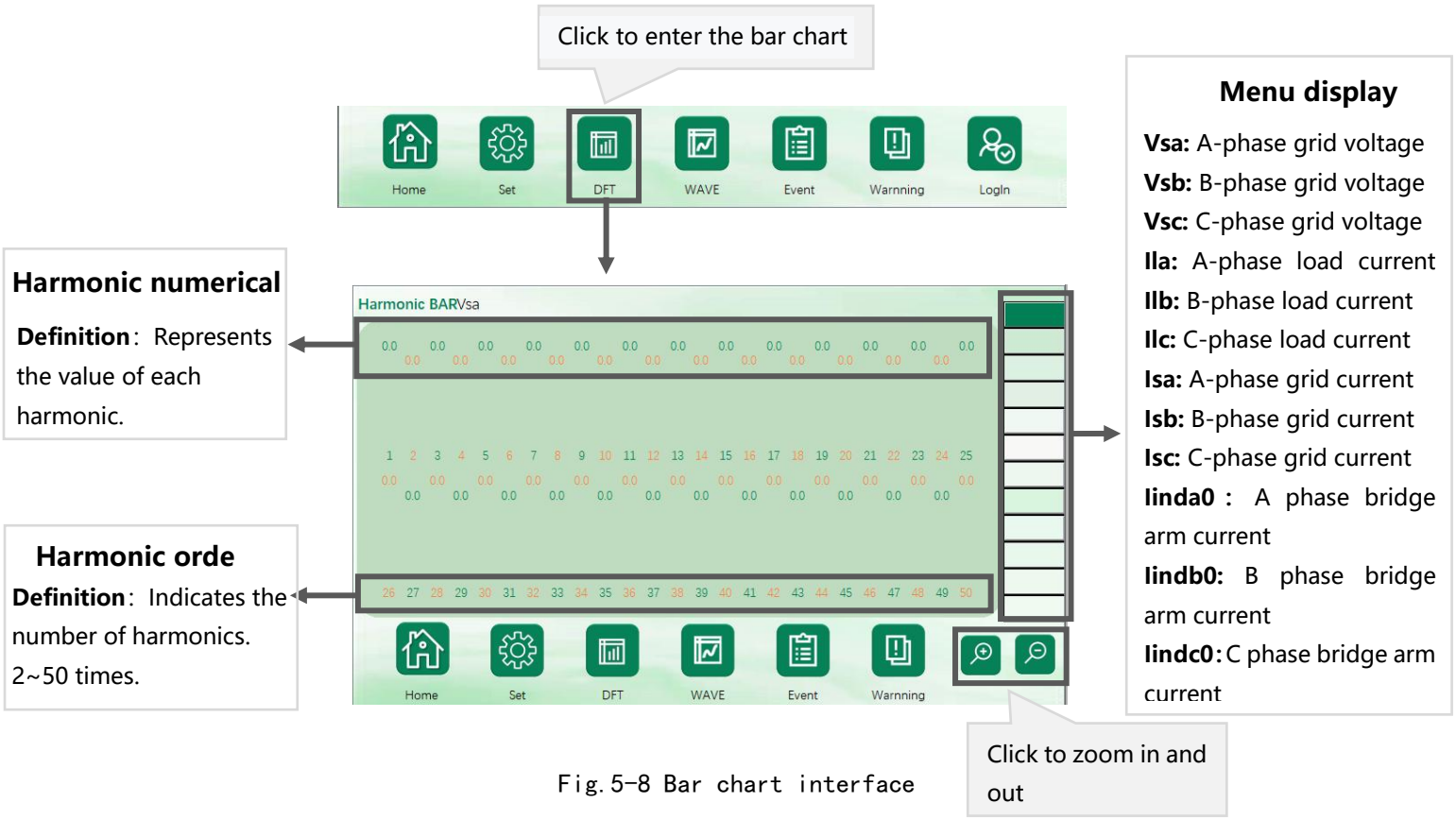

Fig. 5-8 Bar chart interface

5.6 Waveform interface

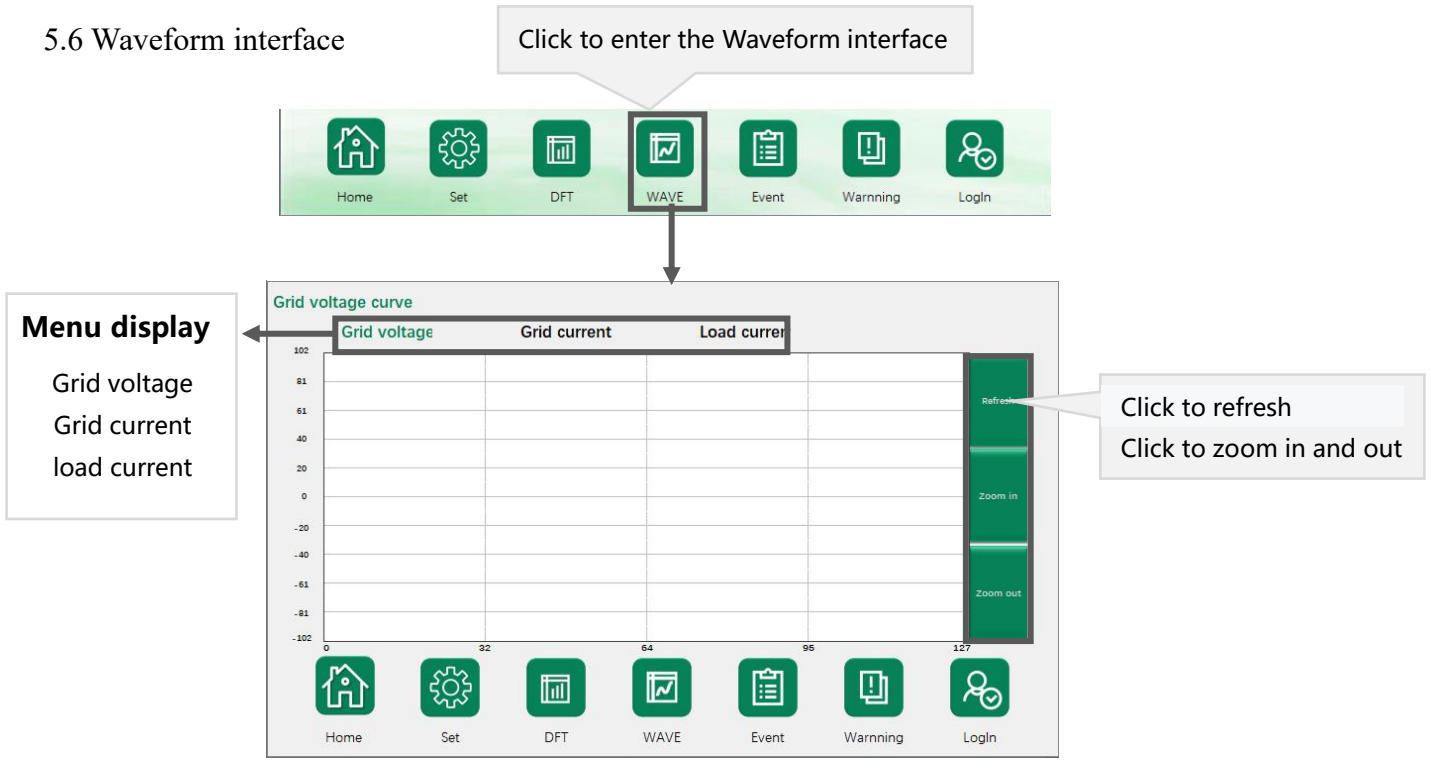

Fig. 5-9 Waveform interface

5.7 History Alarm

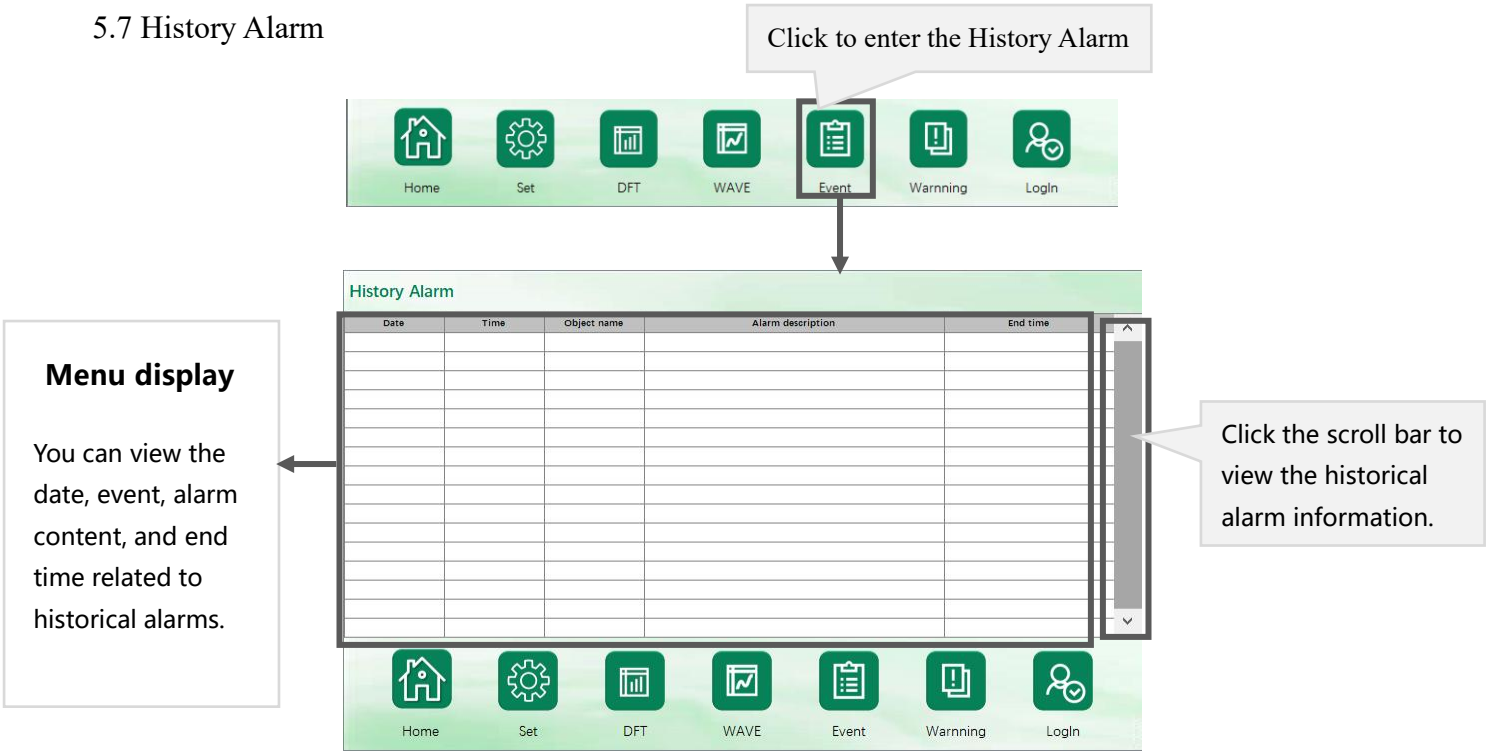

Fig. 5-10 History Alarm

5.8 Warnning

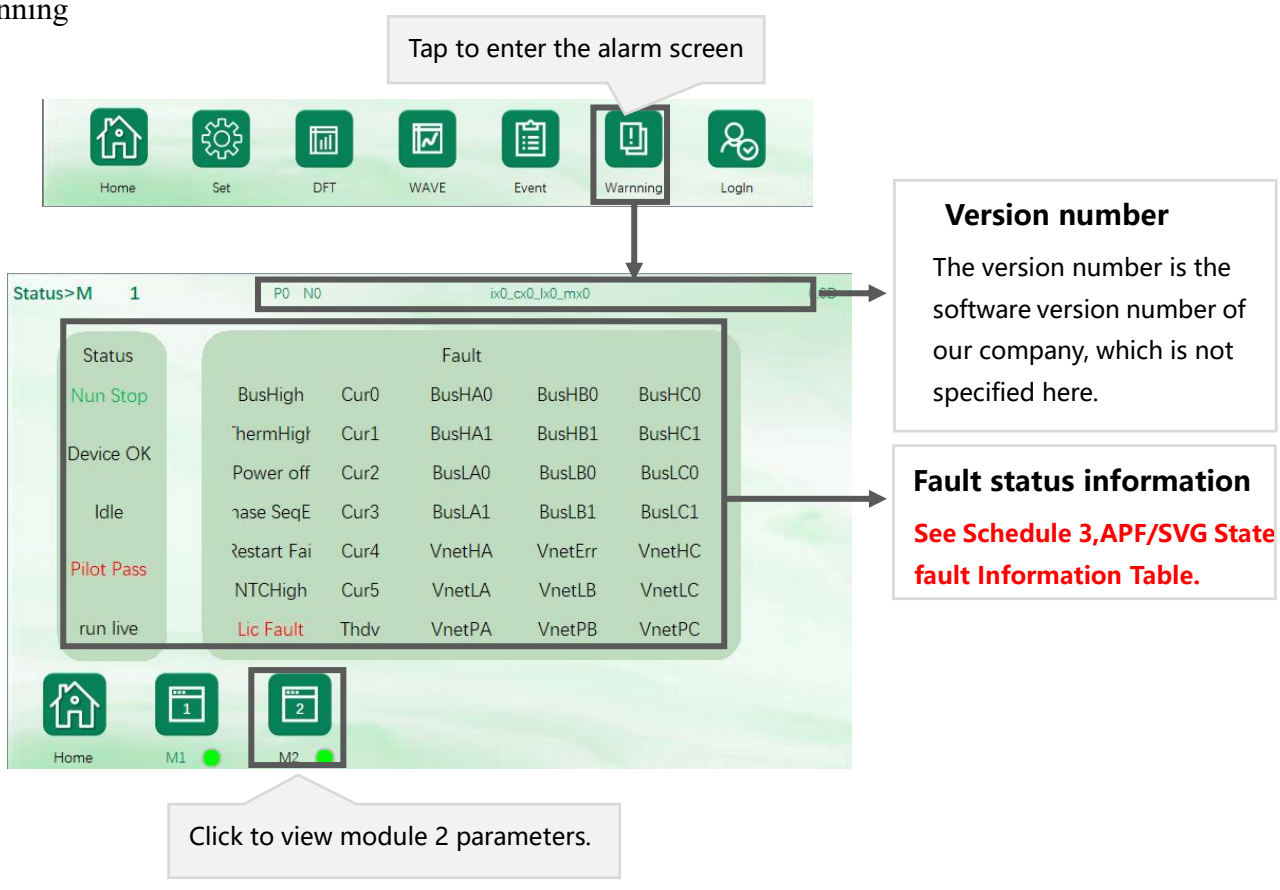

Fig. 5-11 Warnning

5.9 Set-TSC

The TSC control function of the touch screen is optional (including the output 12V control thyristor switch and output dry contact control contactor). When the customer chooses 30kvar SVG module to control capacitor compensation (30kvar SVG module is equipped with 14 12V output ports) or a hybrid compensation controller to control capacitor compensation, the TSC interface will be opened when the touch screen is delivered. You can set TSC parameters on the setting screen.

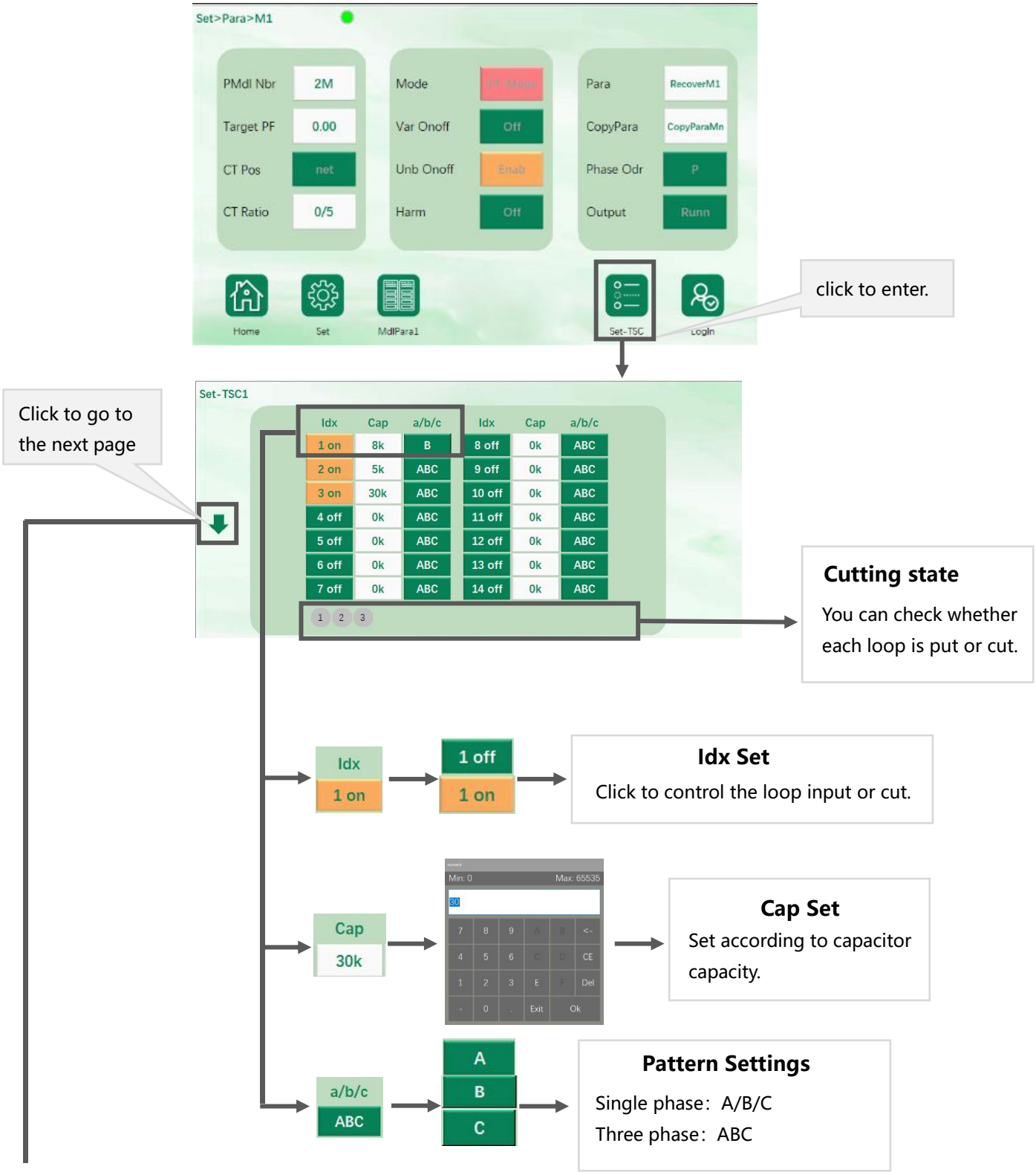

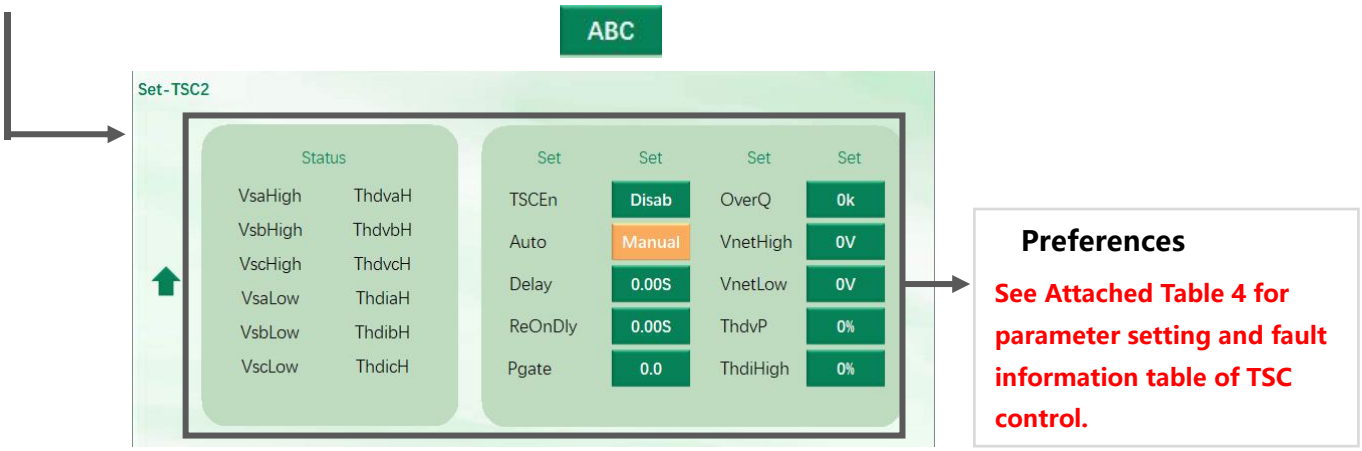

Fig.5-12 TSC-Set

Attention	● If the device automatically shuts down when a fault occurs during operation, the device can be automatically restarted after the fault disappears. ● If the device is powered off immediately after power-on, the current state will be stored. When the next time the call is automatically turned on, the parameter settings before the power-off will be automatically read.
Warning	● To ensure device security and prevent illegal operations, common users can log in only as standard users, debuggers can log in as advanced users, and design technicians can log in as administrators. ● The standard user password is 6758. The password of the advanced user and the password of the administrator are private and can be obtained only with the authorization of the company. Onsite commissioning personnel are not allowed to disclose the password of an advanced user or administrator to common users or other non-professionals to prevent device failure or damage caused by improper operation.



Chapter Six Operation Guide of Small Screen

6.1Parameter interface……74
6.2 Setting interface…… ……77
6.3 Status interface…… ……78
6.4 TSC parameter setting and alarm interface…… ……79

Chapter Six Operation Guide of Small Screen

The wall-mounted module will have a 4.3-inch color touch screen by default. Users of the rack-mounted module can opt for a 4.3-inch color touch screen mounted externally and connected to the module via a communication line. Users can view the parameters of the system device, set parameters and switch operation of the device through the 4.3-inch small screen.

4.3-inch small screen

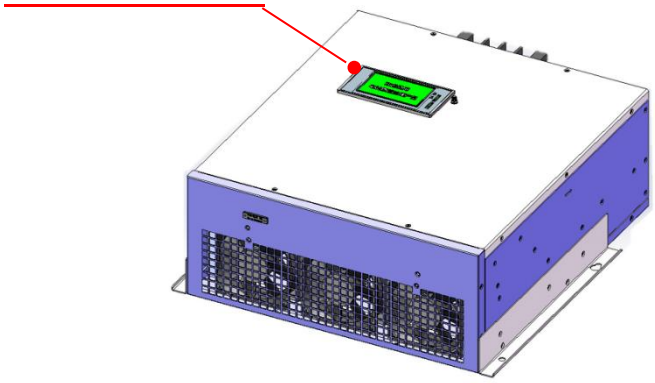

Figure 6-1 the wall-mounted module comes with a 4.3-inch touch screen

6.1 Parameter interface

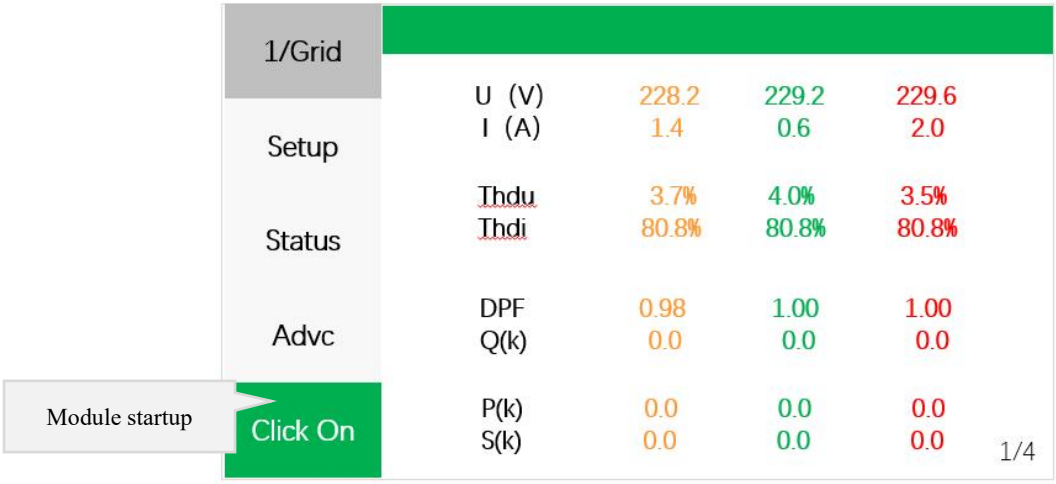

Fig 6-2 monitoring interface - network side parameter interface

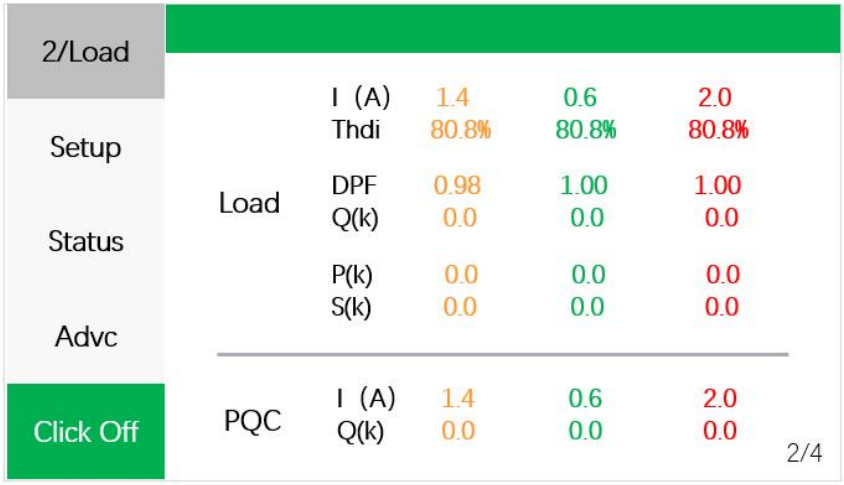

Fig.6-3 monitoring interface - load parameter interface

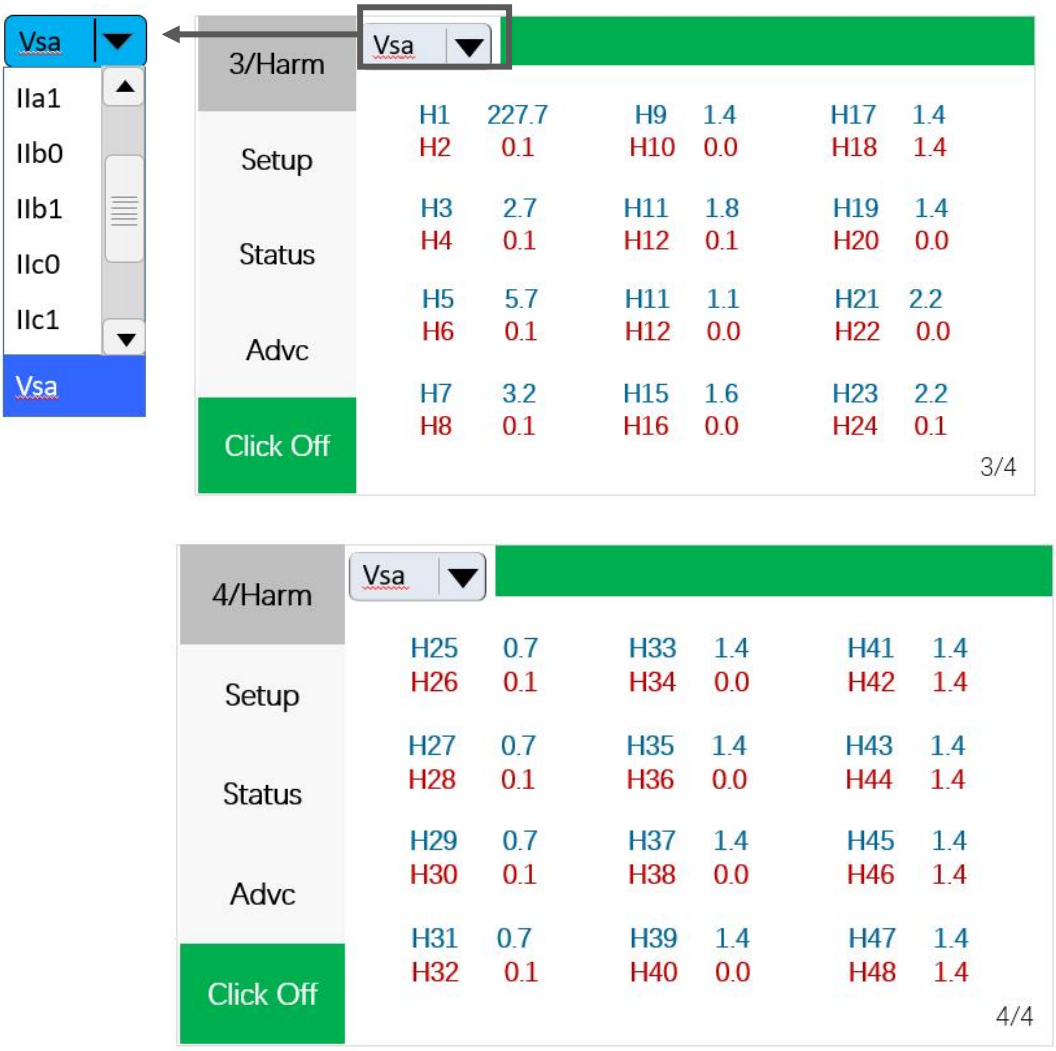

Fig.6-4 Monitoring interface - harmonic parameter interface

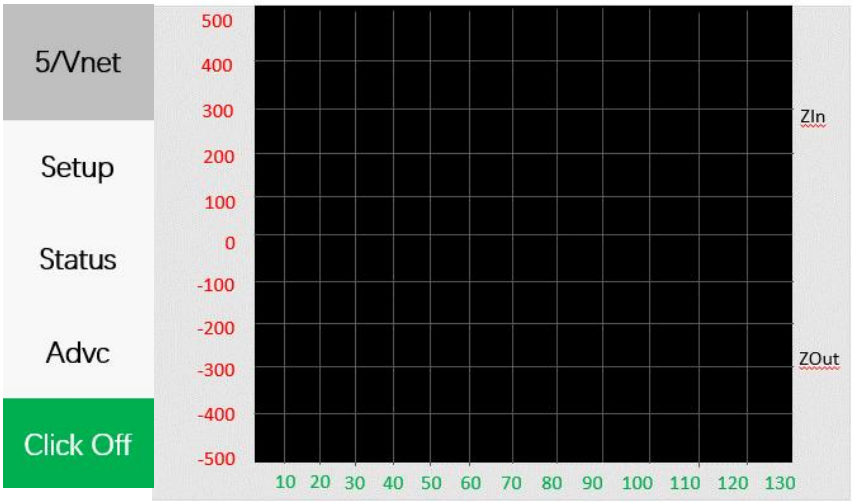

Fig.6-5 Monitoring interface - network side voltage waveform interface

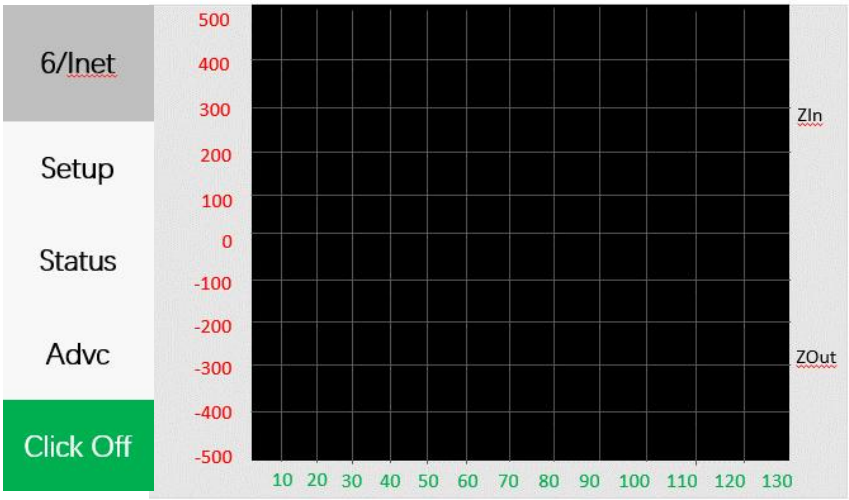

Fig.6-6 Monitoring interface - network side current waveform interface

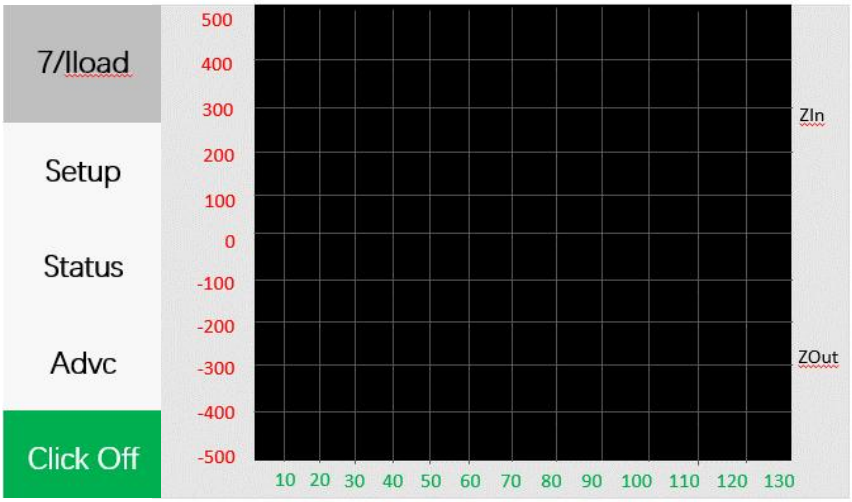

Fig.6- 7 Monitoring interface - load current waveform interface

6.2 Setting interface

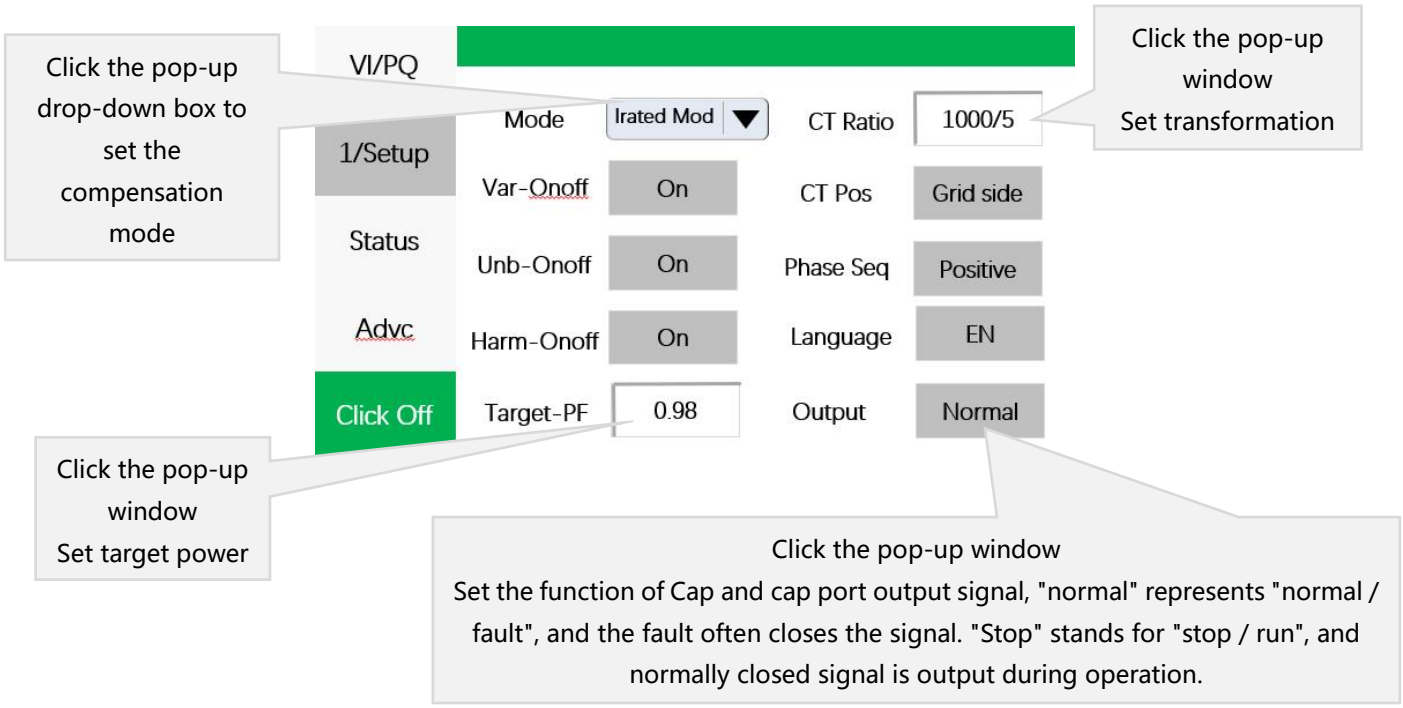

Fig.6- 8 Setting interface 1 - basic settings

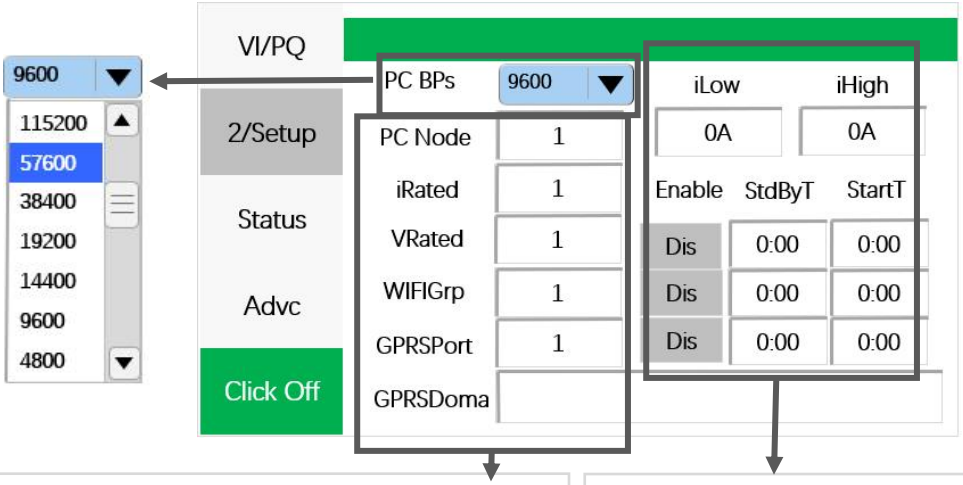

PC Node: The module communicates with the background and sets the address of the upper computer.

iRated : In fixed reactive power mode, set the output current.

vRated: In the target voltage mode, set the target voltage value.

WIFIGrp : In case of WiFi communication, set the WiFi network packet number of the module.

GPRSPort : Set the GPRS port number during GPRS communication.

GPRSDomain : During GPRS communication, set the domain name of GPRS.

Output Setting: Set the current value of the switch on and off, and set the 3 time interval. When the load current reaches the set value, it will start within the set start-up time period. When the current is less than the set value, it will stand by during the standby time period.

Fig 6-9 setting interface 2 - advanced setting 1

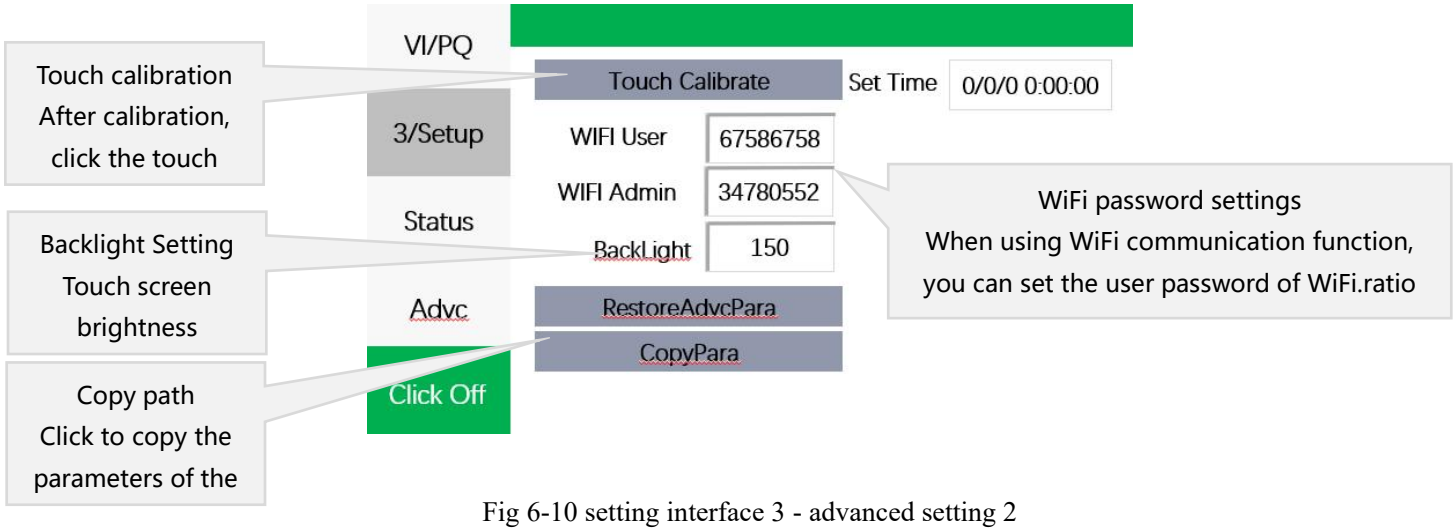

Fig 6-10 setting interface 3 - advanced setting 2

6.3 Status Interface

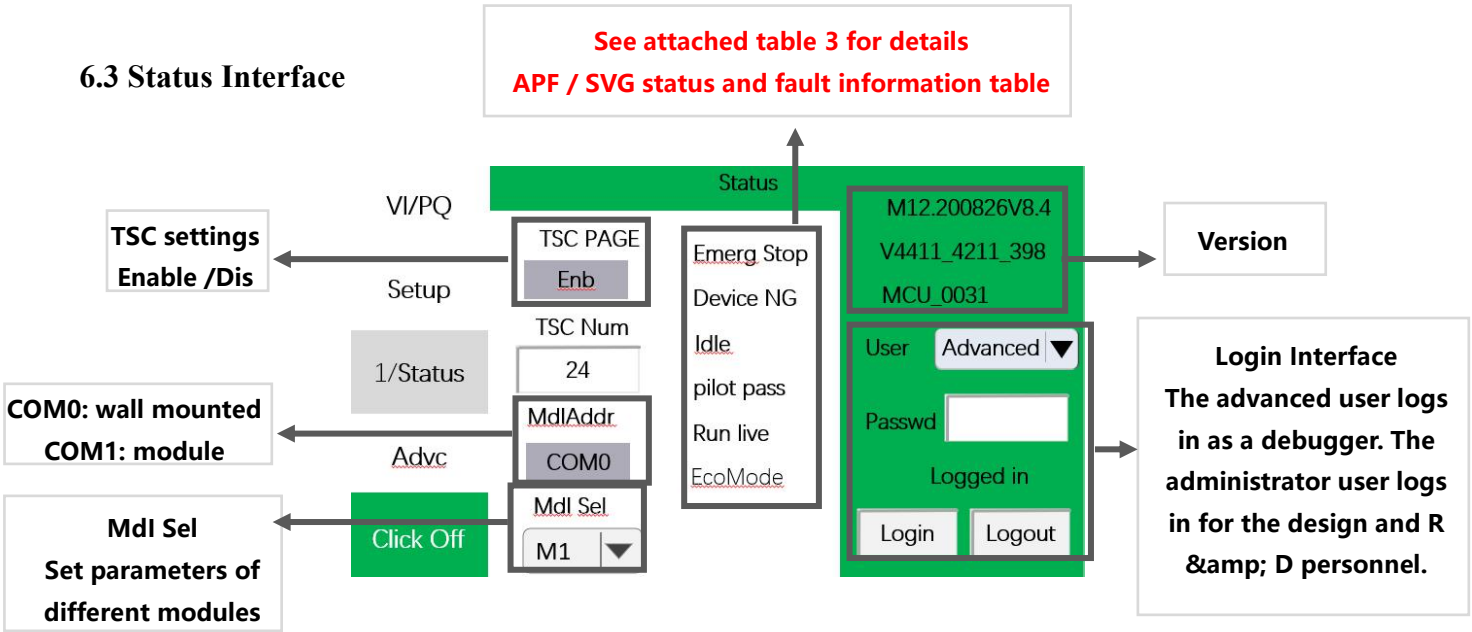

Fig 6-11 status interface 1 - login and module status

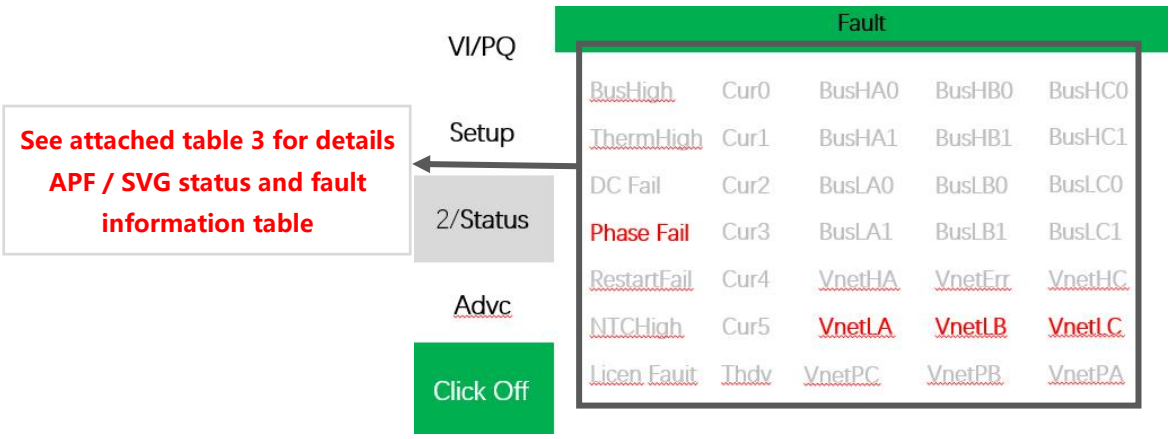

Fig 6-12 status interface 2 - fault alarm

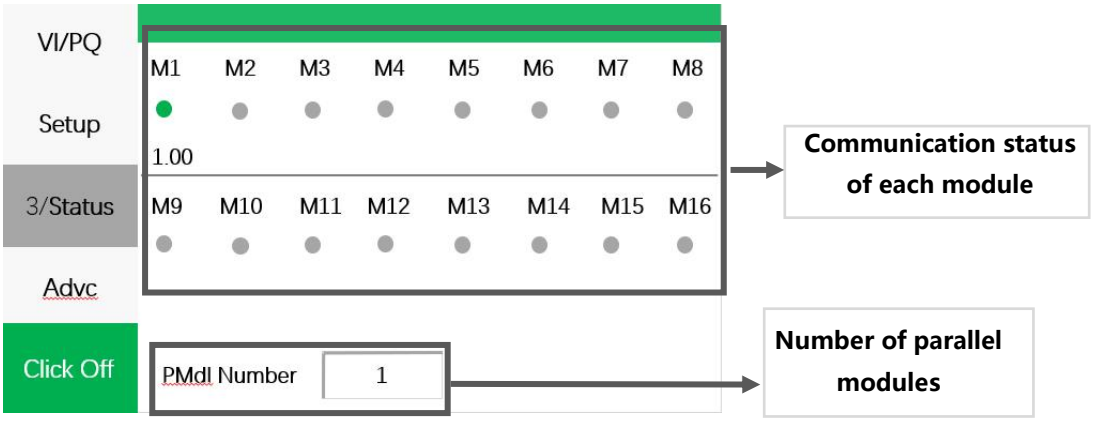

Fig 6-13 status interface 3 - module communication status

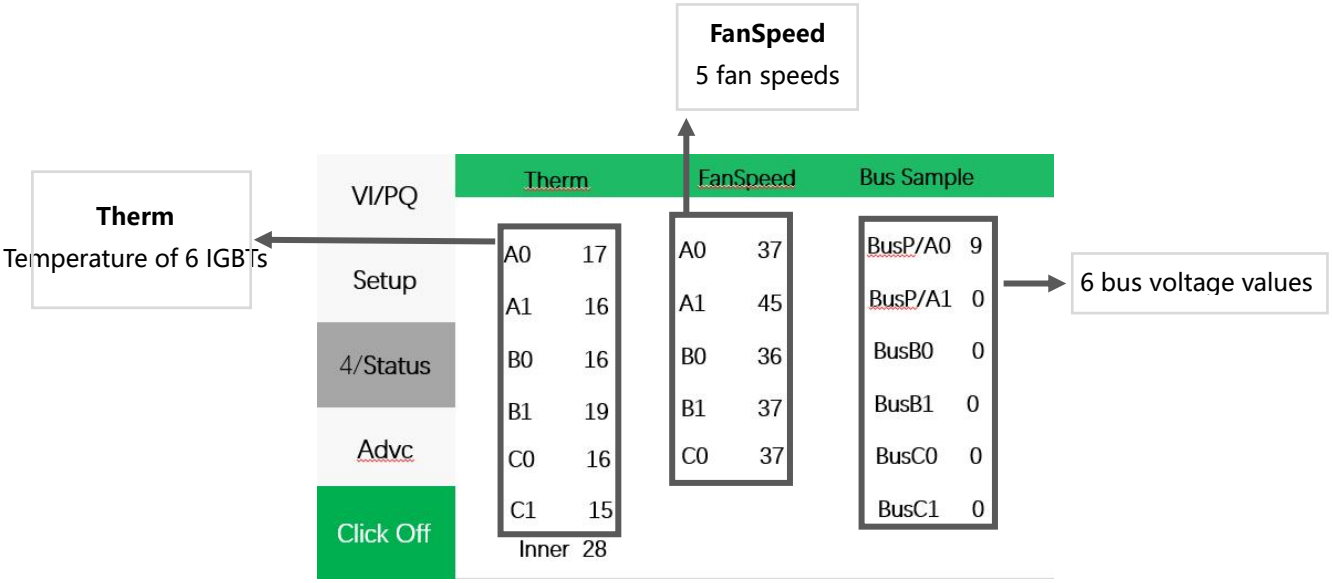

Fig 6-14 status interface 4 - temperature and speed sampling status

6.4 TSC parameter setting and alarm interface

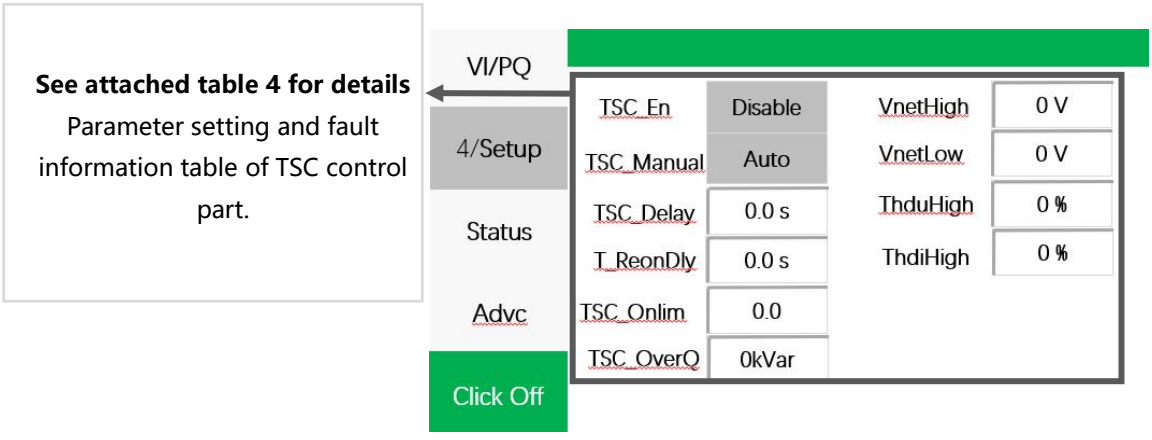

Fig 6-15 setting interface 4-tsc parameter setting 1

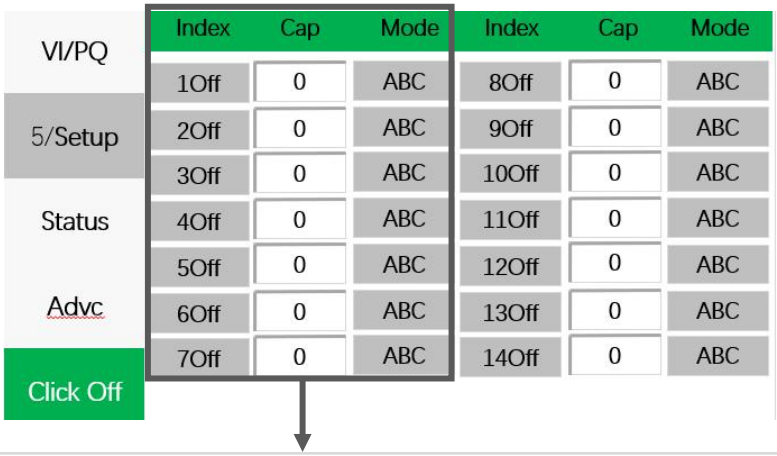

Index: Click to switch on / off the circuit.
Cap: Set the capacity of the circuit. For example, 30 kvar can be set.
Mode: Set whether the circuit is three-phase compensation or single-phase compensation.

Fig 6-16 setting interface 5-tsc parameter setting 2



See attached table 4 for details
Parameter setting and fault information table of TSC control part.

Fig 6-17 setting interface 4-tsc parameter setting 1



Chapter Seven Repair and Maintenance

7.1 Repair and Maintenance·····82

Chapter Seven Repair and Maintenance

In order to ensure safe and reliable operation of the device, the company recommends regular maintenance of the device: it is recommended to clean the dust every 12 months, replace the cooling fan every 4-5 years, and replace the DC capacitor every 8 years.The special environment can shorten the maintenance cycle according to the operation.The steps to fully maintain the equipment are as follows:

Step 1: Check the ambient temperature/humidity.

When operating APF/SVG, test the ambient temperature and humidity to ensure that it is within the allowable range of the device.If it exceeds the allowable range of the equipment, it must be derated.

Step 2: Shut down

- Stop the device and remove the power line.
- Wait at least 10 minutes for the DC side capacitor in the module to be fully discharged.
- Open the appliance door.

Step 3: Cleaning equipment

- Visually inspect the internal components of the equipment and the cable for abnormalities (such as deformation or discoloration).
- Clean up the debris/dust inside the unit, paying particular attention to the area around the cooling fan and the air inlet and outlet.
- Make sure that no foreign objects are dropped into the device.
- Use a soft brush to wipe off the dust on the board.

Step 4: Check the circuit breaker

- Check the circuit breaker for aging and damaged parts.

Step 5: Check the mechanical/electrical connections

- Check that the electrical connections are secure and replace the oxidized pins/connectors.
- Check that all mechanical connections are tight and re-tighten to loose areas.

Step 6: Other exceptions

- If there are other abnormalities, perform the corresponding repairs.

Step 7: Restart the device

- Reconnect the primary line.
- Restore all connections.
- Start the device.
- Confirm the device status.

If the equipment has abnormal conditions or is in an alarm state, you should contact the company in time!

Schedule 1 Technical Specification Table

Type	Items		Indicators								
Name	Product name		**SVG（kvar）**				**APF（A）**				
Specification	Voltage classes		400V			660V	400V				660V
	Module specification		30k	50k	100k/ 150k	50/100k	35A	50A	75A	100A/150A /200A	50/100A
	Module size w*h*d Note 1	480*130*440	✓				✓				
		480*200*530		✓				✓	✓		
		680*200*530		✓	✓			✓	✓	✓	
		680*200*580				✓					✓
	Parallel number		12								
	Maximum capacity of a single cabinet		800*800		500kvar		500kvar			750A	500A
Input	Operating Voltage		380V（-20%～+20%）								
	Working frequency		50Hz（-10%～+10%）								
	Current Transformer		100:5 ~ 10000:5								
Functions	Compensation harmonic		2-13 Odd times (50% of rated current)				2-50 Odd times				
	Harmonic filtering rate		It is better than the standard JB/T11067-2011 low voltage Active Power Filter.								
	Compensation for reactive power		-1~+1 adjustable								
	Compensation for three-phase imbalance		100% imbalance full compensation								
Communication protocol	Communication method		RS485,Modbus protocol								
	Communication Interface		RS485								
	PC software		Yes, all parameters can be set by the host computer								
	Error alarm		Yes, up to 500 alarm messages can be recorded								
	Monitoring		Support independent monitoring of each module / centralized monitoring of the whole machine								
Technical index	Full response time		<20ms								
	Active loss		<2.5%								
	Heat dissipation method		Intelligent air cooling								
	Noise		<60dB								
	Protective function		Over 20 kinds of protections such as over-voltage, under-voltage, overheating, over-current, short circuit, etc.								
	CT installation position		Load side / grid side optional								
Mechanical features	Weight		13kg（35A/30k）；24kg（75A/50k）；38kg（100A/150A/100kvar）；45kg(200A/150K)								
	colour		7035								
Environmental	Operating temperature		-10℃ ~+50℃								
	Altitude		<5000 meters (more than 1500 meters, 1% reduction for each additional 100 meters)								

requirement	Relative humidity	<95%, no condensation
	Protection level	Module IP20, electronic layer IP42 (IP54 can be customized)
	Anti-pollution level	Level 2 (Customizable level 3)

Schedule 2 APF/SVG Parameter setting table

Parameter setting		
Set the content	**The set range**	**Setup instructions**
PMdl Nbr	1~12	The number of parallel modules is set based on the actual number of connected modules.
Target PF	-1~1	Target power due to the value, after compensation target value. The general setting is 0.95
CT Pos	Net/Load	The CT installation position, before the APF/SVG access point is the network side, after the APF/SVG access point is the load side.
CT Ratio	100~10000	CT ratio of the CT, for example, 5000/5, enter 5000.
Mode	PF Mode	Reactive power compensation is preferred. When the power factor reaches the set target power factor value, the remaining capacity can compensate for other set compensation functions, such as harmonic compensation or unbalance compensation.
	Harm Mode	Harmonic compensation is the priority. When the system harmonic value has been compensated to the best effect of equipment compensation, the remaining capacity can compensate for other set compensation functions, such as reactive power compensation or unbalance compensation.
	Unb Mode	It is preferred to compensate the three-phase current imbalance. When the three-phase current of the system is basically the same, the remaining capacity can compensate the three-phase current imbalance.
	Irate Mode	In fixed reactive mode, the device can manually input the current value, and the device generates current as required. If set to a negative value, it emits a perceptual current, if set to a positive value, it emits a capacitive current
	Vrate Mode	At the target voltage, the device can output capacitive current, to improve the system voltage; Output inductive current to reduce the system voltage.
Var Onoff	Off/Enab	The module can compensate the reactive power only when the reactive power compensation function is enabled.
Unb Onoff	Off/Enab	When the unbalance function is enabled, the module can adjust the unbalance of three-phase current.
Harm	Off/Enab	The module can compensate harmonics only if harmonics is on.
Para	RecoverM1	After clicking, the road Settings are restored to factory Settings.
CopyPara	CopyParaMn	After clicking, the set parameters will be automatically copied to other parallel modules.

Phase Odr	P/N	Click to change the set phase sequence, then the system can quickly adapt when the phase sequence is not positive.
Output	Run/Normal	Run: Indicates that the output signal of CAP and CAP port is Run/Stop. Normal: Indicates normal/Fault. CAP and CAP ports are normally closed when they are running or Faulty, and normally open when they are Stopped or Normal.

Schedule 3 APF/SVG Fault status table

Name		Meaning
Status	Nun Stop	Includes non-emergency shutdown and emergency shutdown. There are EPO and epo ports on the back of the module, which can be connected to the emergency stop switch. When the emergency stop switch is pressed or the EPO or epo port is disconnected, emergency Stop is displayed. The status will be displayed on the home screen of the touch screen.
	Device OK	Includes the device normal and device fault. Indicates whether the module is normal or faulty.
	Idle	Including device standby, resistance soft start, device delay, control soft start, operation mode. "Device standby" means that the module is in standby state; "Resistance soft start" means that the module is in the resistance soft start state; "Device delay" means that the module is in the relay delay state; "Control soft start" indicates that the module is in the control soft start state; Running Mode: Indicates that the module is running and can be compensated.
	Pilot Pass	Indicates that the module is in the trial run authorization state. The test run period is 600 hours after the module is powered up. During this period, the module can run if there is a correct trial run authorization code, but cannot run if there is no correct trial run authorization code.
	Run live	Including long-term operation and trial operation. After delivery, the modules of our company can run normally only when they have obtained the authorization code, which can be divided into long-term authorization and trial operation authorization. Only the long-term authorization code can run permanently; After the trial run authorization is obtained, it can only be operated during the factory trial run period. After the trial run period, if the long-term authorization is not obtained, it will not be able to run normally.
Malfunction Alarm	BUS High	If the DC BUS voltage exceeds the designed protection value, a BUS overvoltage alarm is generated.
	Herm High	If the IGBT temperature inside the module exceeds the designed protection value, the overtemperature alarm is generated.
	Power off	If the internal power supply board fails to supply power, the alarm "Power Failure" is generated.
	Phase SeqE	If the phase sequence of the external primary line is negative and the phase sequence is set to positive, the Abnormal Phase Sequence alarm will be generated.
	Restart Fai	If the module fails for three consecutive times in a short period of time, the short shipment fault
	NTC High	If the ambient temperature inside the module exceeds the preset protective value, an internal Overtemperature alarm is generated.
	Lic Fault	If the correct authorization code is not entered in the module, an unauthorized alarm is generated.
	Cur 0~5	If the IGBT bridge arm current exceeds the designed protection value, an overcurrent alarm is generated.

	Thdv	If the system voltage distortion rate exceeds the preset protection value, a Thdv alarm is generated.
	BusHA0 **BusHB0** **BusHC0**	BUS overvoltage: the voltage of phase A, phase B, phase C three-phase DC BUS is too high and exceeds the design protection value.
	BusHA1 **BusHB1** **BusHC1**	BUS overvoltage: the voltage of phase A, phase B, phase C three-phase DC BUS is too high and exceeds the design protection value.
	BusLA0 **BusLB0** **BusLC0**	BUS undervoltage, phase A, PHASE B, phase C three-phase DC BUS voltage is too low, exceeds the design protection value.
	BusLA1 **BusLB1** **BusLC1**	BUS undervoltage, phase A, PHASE B, phase C three-phase DC BUS voltage is too low, exceeds the design protection value.
	VnetHA **VnetHB** **VnetHC**	The voltage of phase A, PHASE B and phase C is too high to exceed the designed protection value.
	VnetLA **VnetLB** **VnetLC**	The voltage of phase A, PHASE B and phase C is too low and exceeds the designed protection value.
	VnetPA **VnetPB** **VnetPC**	The peak voltage exceeds the designed protection value.

Schedule 4 Parameter setting and fault information table of TSC

Parameter setting		
Set the content	**The set range**	**Setup instructions**
TSC En	Disab/Enab	If it is disabled, the TSC function is disabled. Enable: Indicates that the function is
Auto	Auto/Manual	Manual setting or automatic control, generally set to automatic, sales need to be manual debugging, debugging completed to automatic.
Delay	20ms～600s Step 10ms	Delay time of casting and cutting off a route. The capacitor is put in a large amount in a short time, which causes excessive current and damages the capacitor and affects the distribution system. Control thyristor, generally set to 20ms~2s; Generally, the control contactor is set to 5s to 60s.
ReOnDly	0~180S Step 1s	Set the interval time for the second switching of the same capacitor to avoid voltage superposition and capacitor damage caused by repeated switching of the capacitor in a short time. Generally, the value can be set to 10S.
Pgate	0.1~1.2 Step 0.1	The value of the "switching threshold" refers to the "input threshold coefficient", whose sum with the "cutting threshold coefficient" is 1.2. When lag, if the grid reactive power > input threshold × pre-input capacitor capacity, then input the capacitor.
OverQ	0~100kvar Step 1kvar	The system allows overcompensation, but the overcompensation capacity cannot be greater than the set value. In the automatic state, the control program will predict whether the capacity of overcompensation after input is greater than the set value, if greater, no input. Generally, the value is less than the capacity of the minimum loop.
VnetHigh	0V~460V Step：1V	When the grid voltage is greater than the set value of overvoltage, the input circuit shall be cut off component by component, and one group shall be cut off every 100ms until all the circuits are cut off. The overvoltage protection can be set to 240V.
VnetLow	0V~460V Step：1V	When the grid voltage is lower than the undervoltage protection value, the input circuit shall be cut off component by component, and one group shall be cut off every 100ms until all the circuits are cut off. Or when a phase is deficient, the single phase capacitor of that phase ceases to work. Generally, the undervoltage protection can be set to 180V.
Thdv P	0%~25% Step 1%	Protection value of harmonic voltage distortion rate. When the harmonic voltage distortion rate of the system is higher than the set value, an alarm will be issued and the loop that has been put in is cut off one group by one. Generally, the value can be set to 7%.
Thdi High	0%~100% Step 1%	Protection value of harmonic current distortion rate. When the harmonic current distortion rate of the system is higher than the set value, an alarm will be issued and the loop that has been put in is cut off one group by one. Generally, the value can be set to 30%.

Malfunction	
Content	**Explain**
VsaHigh **VsbHigh** **VscHigh**	When the system voltage exceeds the protection value, an alarm is generated.
VsaLow **VsbLow** **VscLow**	Description The system voltage is lower than the protection value. An alarm is generated.
ThdvaH/ThdvbH/ **ThdvcH**	If the system voltage distortion rate exceeds the protection value, an alarm is generated.
ThdiaH/ ThdibH/ **ThdicH**	If the system current distortion rate exceeds the protection value, an alarm is generated.

Data version V8.2