117

AGF-T Perforation type PV confluence acquisition device

Installation and Operation Instruction V1.3

DECLARATION

No part of this publication may be reproduced, stored in a retrieval system, or transmitted in any form by nay means,electronic, mechanical photocopying, recording,or otherwise without prior permission of Acrel. All rights reserved.

This company reserve power of revision of product specification described in this manual, without notice. Before ordering, please consult local anget for the latest specification of product.

CONTENTS

PV combiner box design considerations 1

1 General 2

2 Product Naming 2

3 Characteristics 2

4 Product function 2

5 Technical Parameters 3

6 Outline and installation 4

6.1 Outline dimension 4

6.1.1 Power supply module size 4

6.1.2 Confluence acquisition module installation dimension 4

6.1.3 LCD display module installation dimension 5

6.2 Connections of modules 6

6.2.1 Data cable connection way 6

6.2.2 Installation schematic 7

6.3 Definition of input port 7

8 Module's indication LED status instruction 8

9 Instruction for LCD display module menu 9

9.1 Instruction for main module nixie tube operation menu 9

9.2 Instruction for LCD display module menu 12

9.2.1 Panel diagram of LCD display module 12

9.2.2 Menu operation and keypad function 12

10 Alarm setting 14

11.1 Communication connection 15

11.2 Commissioning and maintenance 15

11.2.1 Instructions for use 15

11.2.2 Testing 16

12 Communication instruction 16

12.1 Communication register table 16

12.2 DI state (switching state) access 24

12.3 DO state(switching output alarm state) access..... 25
12.4 Switching state output(alarm state)..... 25
12.5 Communication example..... 25

PV combiner box design considerations

- When the PV combiner box is subjected to the power frequency withstand voltage test, all the poles of the main circuit should be connected together (the positive and negative poles of the main circuit must be connected together), and then the withstand voltage should be applied with the grounded case ; If the auxiliary circuit and the grounded enclosure are to be tested for power frequency withstand voltage, all poles must be connected together before testing. Incorrect test methods will result in permanent damage to the acquisition device.
- The auxiliary power supply circuit and voltage measurement circuit of the confluence acquisition device must be equipped with fuses. It is recommended to make 3A/1000V DC fuses;
- Fuses and DC circuit breakers should be selected with 3C certified products;
- The rated current of the fuses shall be 1.5 times the rated current of the photovoltaic panel;
- When the confluence device is used for an ungrounded PV system, fuses should be installed for both the positive and negative poles; only when the confluence device is used for a grounded PV system, the grounding pole can be installed without a fuse and the fuse is installed at the other pole only;
- The product design and installation must ensure that the clearance and creepage distance between bare metal parts meet the requirements of CGC/GF037:2014 《Technical Specifications for Photovoltaic Confluence Equipment》 5.1.4 to ensure that there is no ignition, arcing, etc. during normal operation;
- The lightning protection circuit must be equipped with a fuse or circuit breaker to prevent accidents caused by SPD short circuit or ground fault;
- The communication reference ground of the convergence collecting device needs to be connected independently. The communication line is recommended to use three-core shielded wires, which are respectively connected to A, B, and COM. The shielding layer is grounded at the communication management machine at one point. The communication connection mode adopts a daisy-chain structure, the earth terminal of confluence acquisition device should be directly connected to the ground of the local PV combiner box;
- The installation position of the confluence acquisition device should be away from the heat source. For components with temperature rise above 30K, at least 150mm distance should be maintained to prevent temperature influence;
- When the PV combiner box is designed with anti-reverse function, the anti-reverse diode should meet:
  The rated voltage shall not be less than 2 times the rated voltage of the PV combiner box;
  The rated current shall be not less than 2 times the rated current of the photovoltaic panel;
- When the confluence acquisition device is used, the power module and the confluence acquisition module should be transferred at the same time, and the device and the connecting cable cannot be plugged and unplugged.

AGF-T Perforation type PV confluence acquisition device

1 General

AGF-T Perforation type PV confluence acquisition device is specially designed for smart PV combiner box. It is used for monitoring the running state of solar panels in solar cell arrays, measuring the currents of solar cell, detecting the state of surge protection devices and DC breaker. The device is equipped with RS485(Modbus) communication port for transmitting all the datas to master device.

2 Product Naming

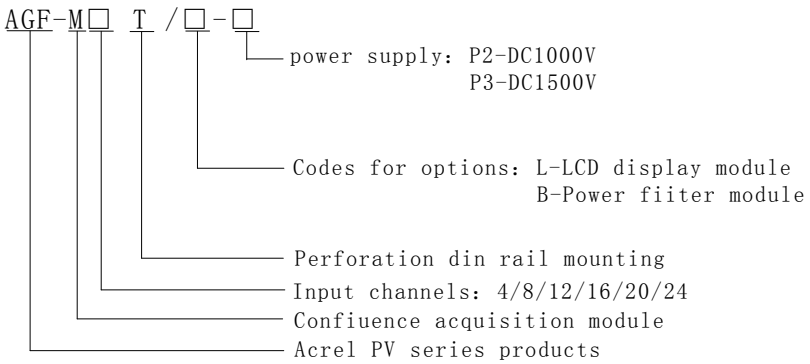

* The power filter module is only used when there are additional filtering requirements for the power supply.

3 Characteristics

- Primary current is connected in through perforation. Easy installation, high safety.
- With Hall sensor, the max isolation measuring current 20A
- Voltage measurement range for Bus bar is up to DC1.5kV
- LED display, fit for checking and testing operation in wide-temperature or outside environment.
- With the function of inner temperature measurement for real-time measurement of the inner temperature of combiner box
- With RS485 Modbus RTU
- More options of power supply
- Compatible with din rail installation and baseboard fixation installation, small dimension saving more box space.

4 Product function

- Photovoltaic cell open circuit alarm to cooperate with group string voltage and judge Comprehensively
- With 3-channel switching state monitoring to collect output idle contact information of DC breaker 、lightning protector.
  protector etc
- Option RS485 port, Modbus-RTU protocol; programmable slave address, baud rate, data format
- English LCD display，convenient to set parameters and check the data

5 Technical Parameters

Item	AGF-M4T	AGF-M8T	AGF-M12T	AGF-M16T	AGF-M20T	AGF-M24T
Input channels	4	8	12	16	20	24
Rated current	DC 0~20A					
Response time	1s					
Accuracy	0.5 class					
Temperature coefficient	400ppm					
RS485 communication	RS485/ModBus-RTU protocol，4800/9600/19200/38400bps					
Additional function						
Switch input	3-way input(optocoupler or dry contact mode)					
General technical parameters						
Temperature/ Humidity	Working temperature: -35~+65℃， humidity95%,no condensation, no corrosion gas place *Display module work temperature:-20~+70℃					
Temperature measurement function	To measure the inner temperature of box （-20℃～100℃）					
Altitude	≤3000m					
Insulation resistance	≥100MΩ					
Industrial frequency withstand voltage	power/communication/switching input/cell voltage input--AC 2kV/1min (When the auxiliary power supply is DC1500V, the withstand voltage between the power supply, photocell input and other circuit is AC 2.7kV) Current input/power、cell voltage 、communication、switching state—AC3.5kV/1min					
EMC	GB_T 17626.2-2006； Electrostatic discharge immunity test 3rd grade, air discharge 8kV, contact discharge 6kV.					
	GB_T 17626.4-2008； Electrical fast transient immunity test grade 4, common mode 4kV, difference mode 2kV					
	GB_T 17626.5-2008； Surge(shock) immunity test grade 4, common mode 4kV, difference mode 2kV					
	GB_T 17626.8-2006； Power frequency magnetic field immunity test grade 4					

6 Outline and installation

6.1 Outline dimension

6.1.1 Power supply module size(Figure 1)

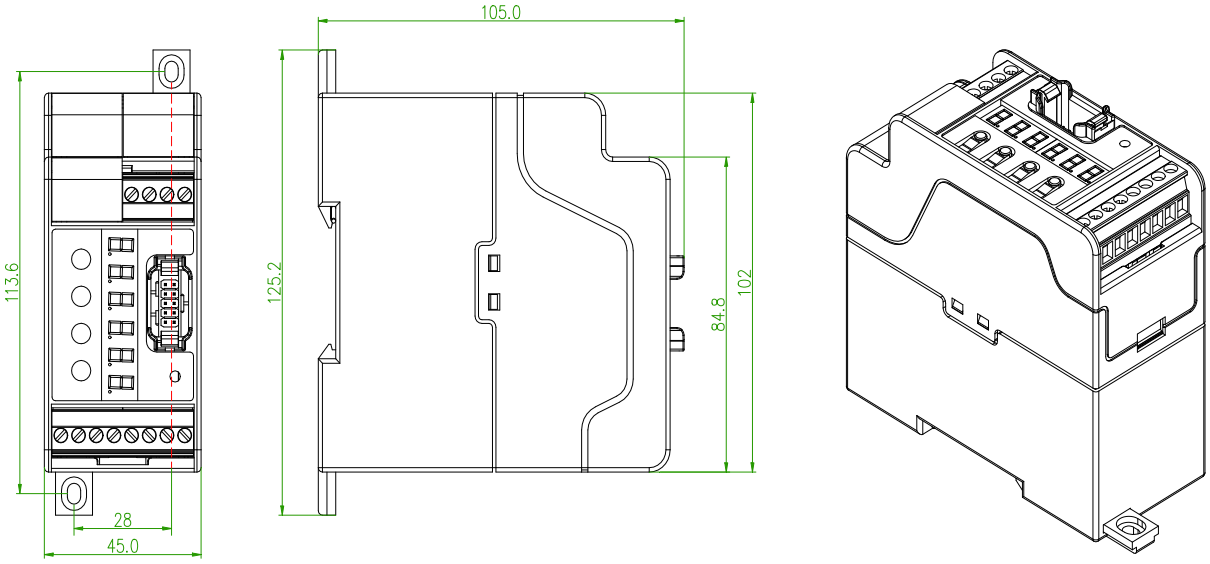

Figure 1

Note: Imaginary line is the fixing size of the bottom plate
As power supply module is heavy, bottom plate is needed in installation to avoid its coming off during transportation.

6.1.2 Confluence acquisition module installation dimension

8-channel confluence acquisition module installation dimension(Figure 2)

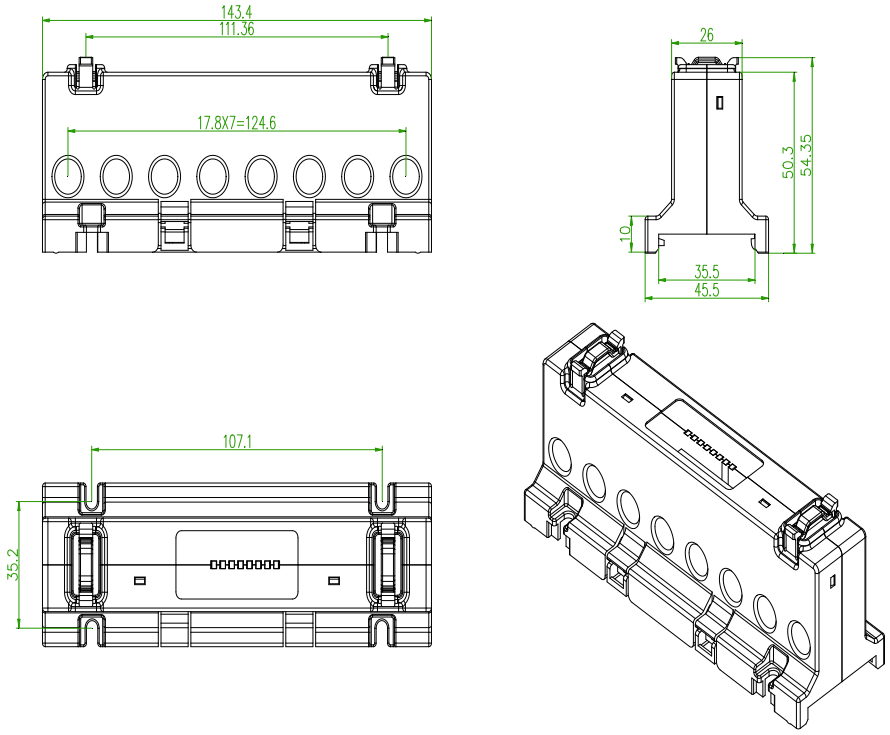

Figure 2

4-channel confluence acquisition module installation dimension(Figure 3)

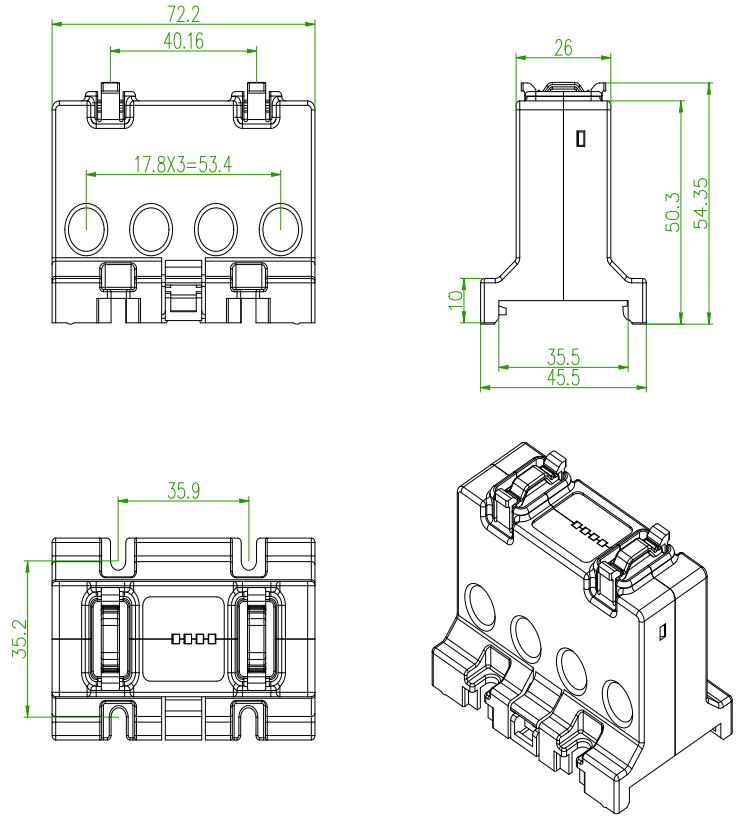

Figure 3

Configuration of 8-channel or 4-channel confluence acquisition module will be decided by actual needs: when 4 channels or less are needed, 4-channel confluence acquisition module will be installed, when needed channel number is 5 to 8, 8-channel confluence acquisition module will be installed. When needed channel number is more than 8, then the number will be divided by 8. If there is a remainder in the result and the remainder is less than 4, then 4-channel confluence acquisition module will be installed. If the remainder is more than 4, 8-channel confluence acquisition module will be installed.

6.1.3 LCD display module installation dimension (Figure 5)

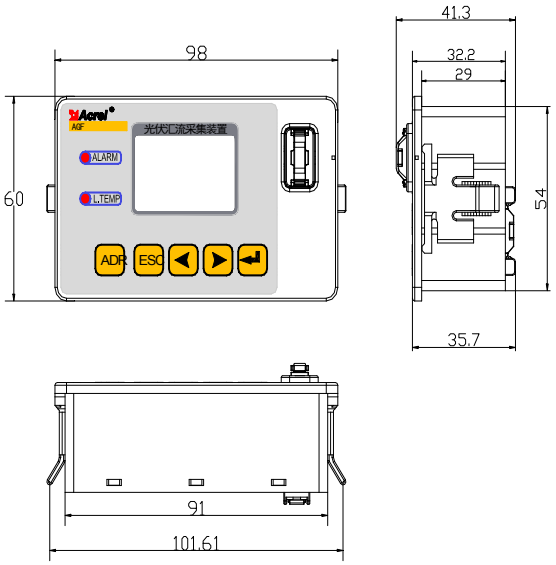

Figure 4

6.2 Connections of modules

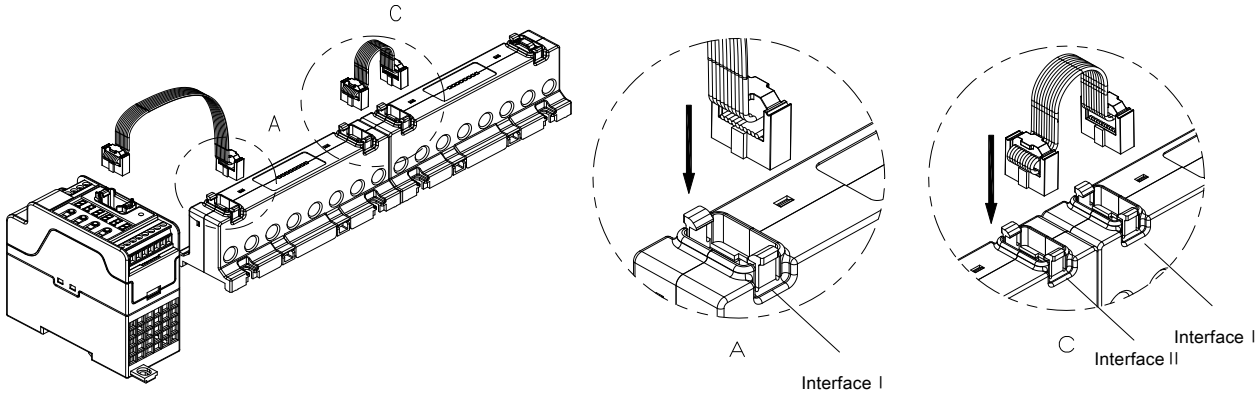

Figure 5

6.2.1 Data cable connection way

The connection between each module is through the external data line. Please confirm the sequence of the two external data line ports before connecting each module. Each confluence acquisition module has two outside connection ports(Figure 4): Port I and Port II, in which Port I is used to connect upstream module and Port II is used to connect follow-up modules. Please pay attention to it that the propulsion part of the data line connector must be fixed with the groove on the port.

The connection sequence order of PV confluence acquisition modules must follow: confluence acquisition module 1's port Ⅱ-->confluence acquisition module 2's port Ⅰ ,
confluence acquisition module 2's port Ⅱ-->confluence acquisition module 3's port Ⅰ .
When connecting the confluence acquisition modules ,multiple confluence modules should be in sequence order, it is not allowed to insert any other function module between two sequenced confluence modules. Wrong connection will lead to abnormal operation of the device.

LCD display module can be connected with Port II of confluence acquisition module, The LCD display module is not necessary to be connected in at ordinary time except when testing and checking.

The address allocation of PV confluence acquisition module is automatically distributed by the power module(main module), The first confluence acquisition module connected to the power module will be distributed automatically with 1st to 8th channels, and the next confluence acquisition module connected to port II will be distributed automatically with 9th to 16th channels, the final confluence acquisition module is distributed automatically with 17th to 24th channel.

6.2.2 Installation schematic

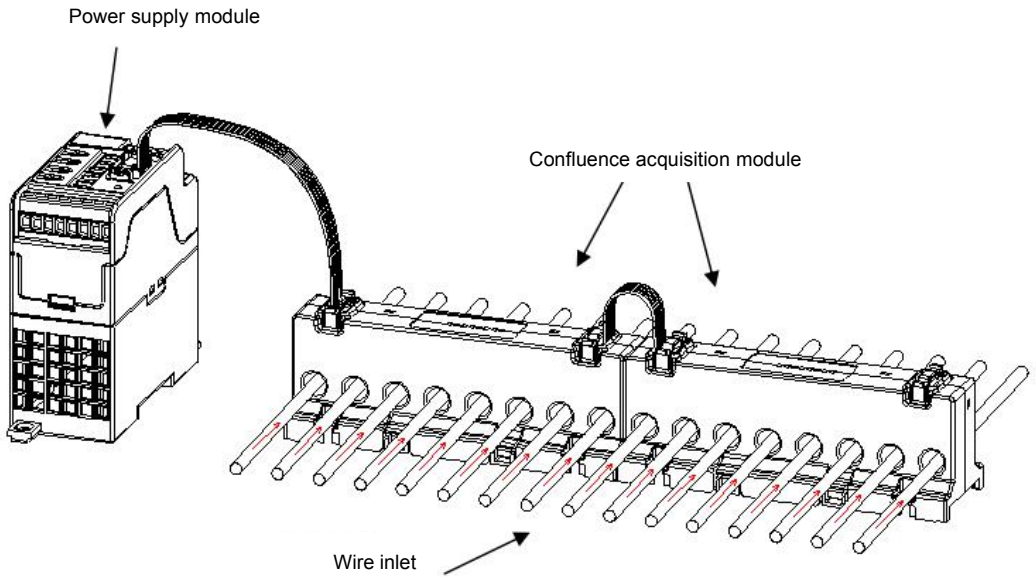

Note: The arrow shows current direction. Wrong connection will lead to abnormal operation of the device.

6.3 Definition of input port

After the address of confluence acquisition module is distributed by the main module，the input channel address of first module is from 1st to 8th channel，the input channel address of second confluence acquisition module is from 9th to 16th channel，the input channel address of final confluence acquisition module is from 17th to 24th channel. The input channel definition of 1st to 8th channel of a single module is shown as Figure 3.

7 Wiring mode

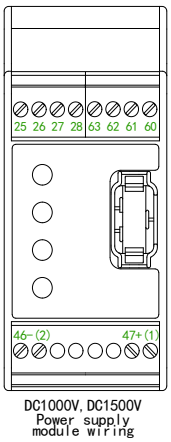

DC1000V, DC1500V
Power supply
module wiring

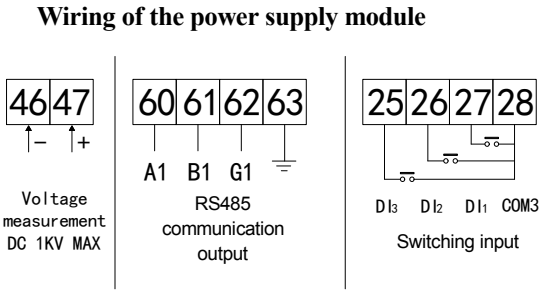

Note: Power supply circuit and voltage measuring circuit must be installed with fuse with 3A rated current and rated voltage that is the highest working voltage in these circuits to ensure safety.

8 Module's indication LED status instruction

<table>
<tr><td rowspan="3"></td><td rowspan="3">Off</td><td colspan="6">on</td></tr>
<tr><td colspan="2">Green</td><td colspan="2">Red</td><td colspan="2">Orange</td></tr>
<tr><td>Constant on</td><td>Flicker</td><td>Constant on</td><td>Flicker</td><td>Constant on</td><td>Flicker</td></tr>
<tr><td>Power supply module</td><td>No power</td><td>Internal communication is normal</td><td>Internal /external communication is normal</td><td>Internal communication is abnormal</td><td>Internal communication is abnormal</td><td>------</td><td>------</td></tr>
<tr><td>Confluence acquisition module</td><td>No power</td><td>Current is normal</td><td>Channel data is displayed</td><td>No input current or over input current</td><td>Channel data is displayed</td><td>Input current is reverse</td><td>Channel data is displayed</td></tr>
<tr><td rowspan="2">Display module</td><td>ALARM indication</td><td>No alarm SOE</td><td colspan="6">Confluence current over the alarm threshold(high current alarm or open circuit alarm）</td></tr>
<tr><td>L.TEMP indication</td><td>Normal work</td><td colspan="6">The display module in low temperature condition，the LCD might not show normally</td></tr>
</table>

9 Instruction for LCD display module menu

9.1 Instruction for main module nixie tube operation menu

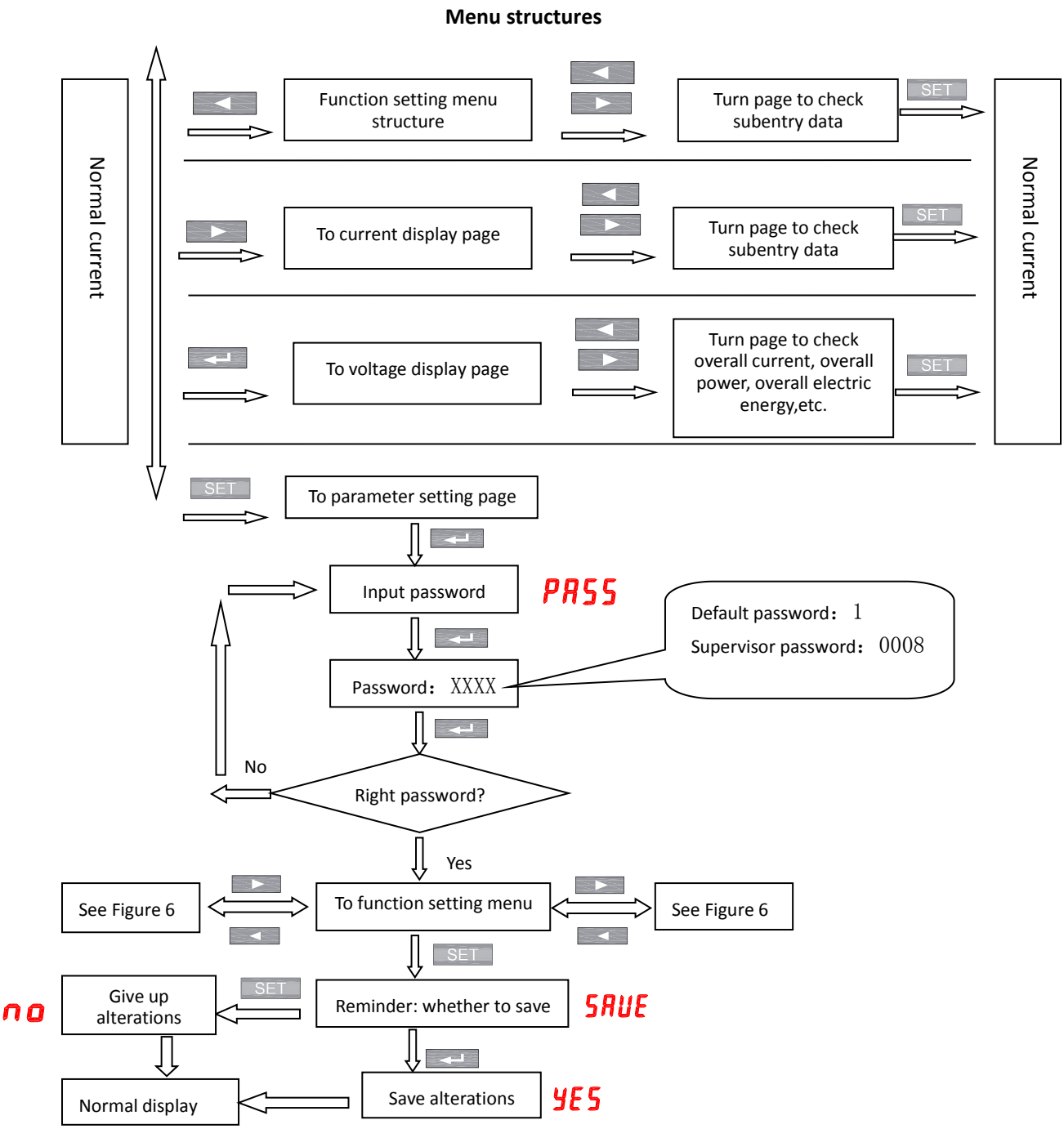

Figure 6

Function setting menu structure

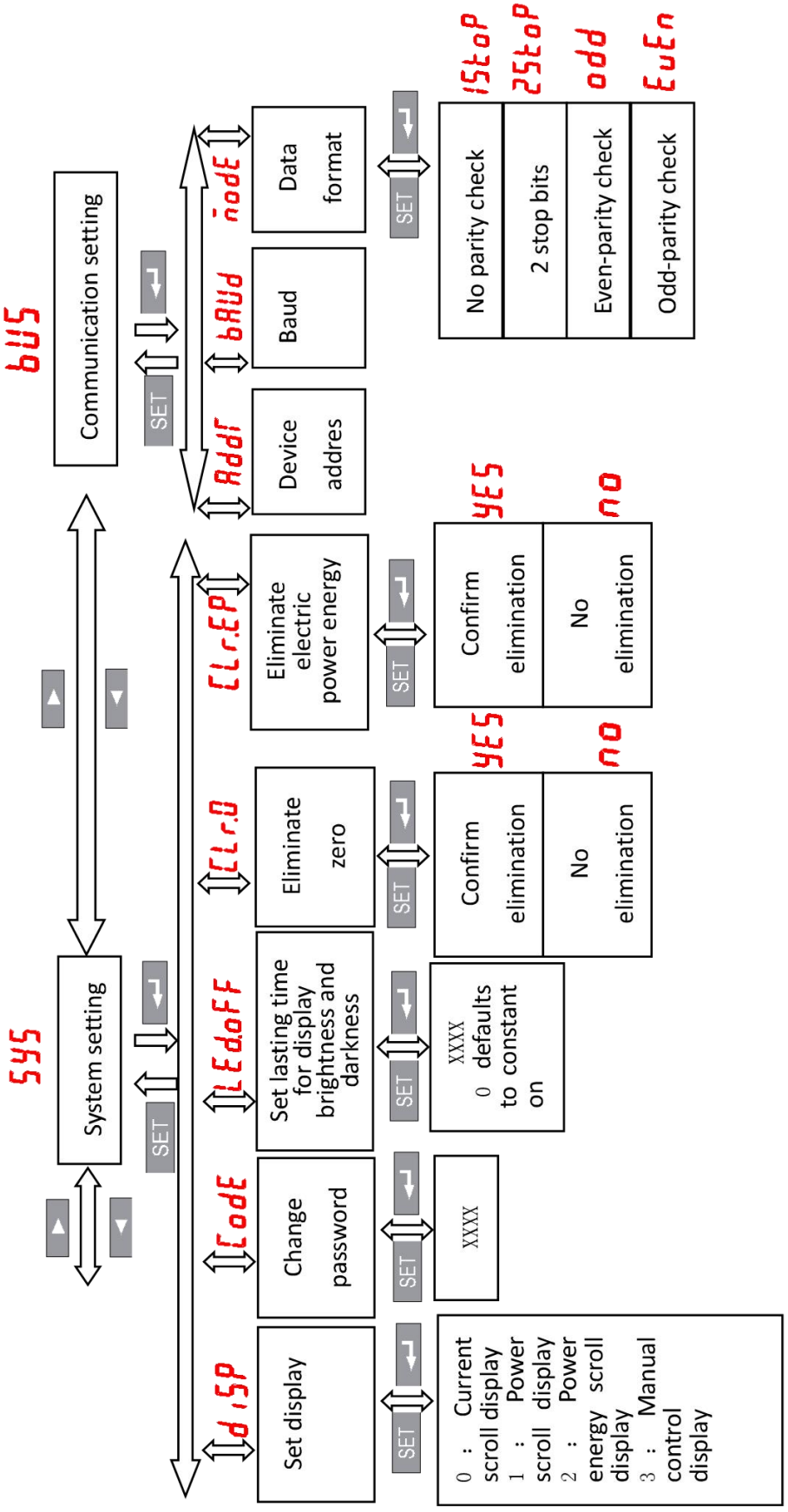

Figure 7

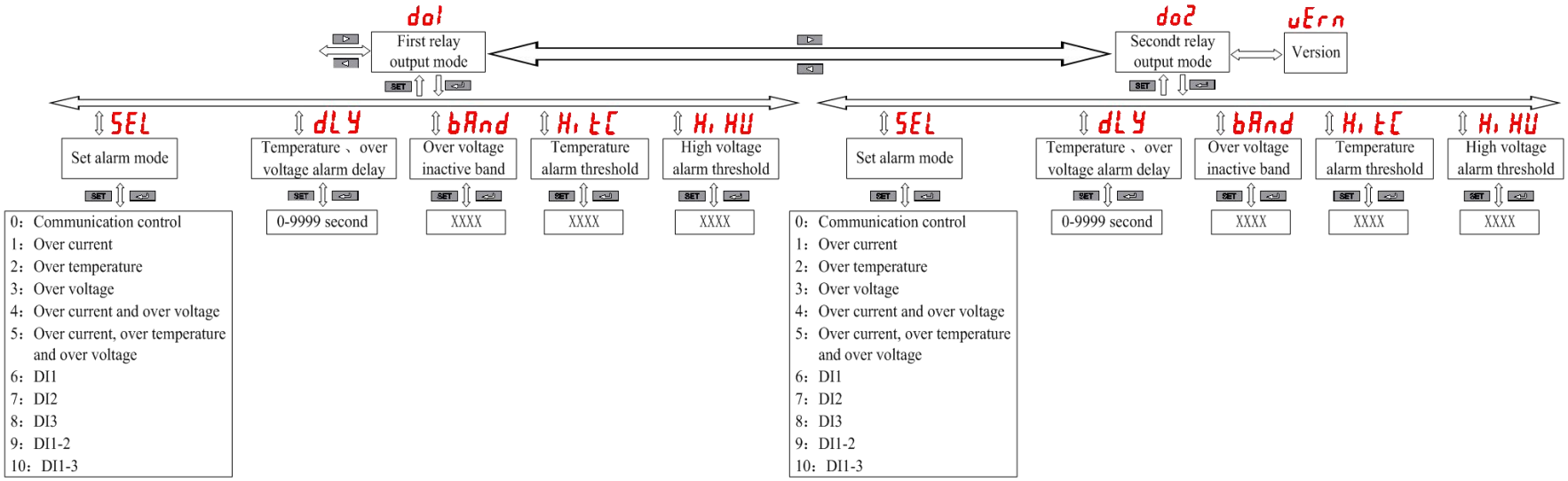
do1
First relay output mode
do2
Secondt relay output mode
uErn
Version
SEL
Set alarm mode
dLY
Temperature 、over voltage alarm delay
bAnd
Over voltage inactive band
Hi tC
Temperature alarm threshold
Hi HU
High voltage alarm threshold
0：Communication control
1：Over current
2：Over temperature
3：Over voltage
4：Over current and over voltage
5：Over current, over temperature and over voltage
6：DI1
7：DI2
8：DI3
9：DI1-2
10：DI1-3
0-9999 second
XXXX
XXXX
XXXX
SEL
Set alarm mode
dLY
Temperature 、over voltage alarm delay
bAnd
Over voltage inactive band
Hi tC
Temperature alarm threshold
Hi HU
High voltage alarm threshold
0：Communication control
1：Over current
2：Over temperature
3：Over voltage
4：Over current and over voltage
5：Over current, over temperature and over voltage
6：DI1
7：DI2
8：DI3
9：DI1-2
10：DI1-3
0-9999 second
XXXX
XXXX
XXXX

Figure 8

9.2 Instruction for LCD display module menu

9.2.1 Panel diagram of LCD display module

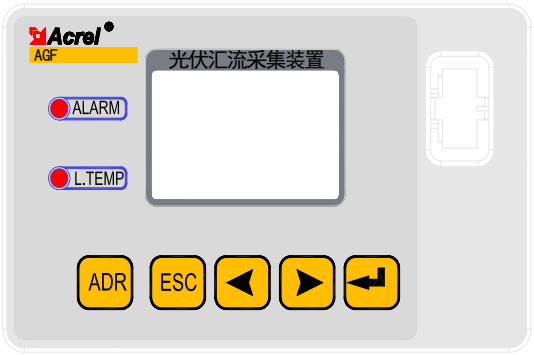

9.2.2 Menu operation and keypad function

Keypad	Status	Function
ADR Quick address setting	Click	On the main menu, user can quickly go into the address setting interface and also can click to exit address setting interface.
ESC "Cancel" button	Click	Exit menu or cancel the alteration operation.
"Back" button	Click	Back to menu, user can also use it to reduce the parameter value in the setting mode.
	Long press	To reduce the parameter value in a fast way in the setting mode.
"Forward" button	Click	Forward to next menu page, user can also use it to increase The parameter value in the setting mode.
	Long press	To increase the parameter value in a fast way in the setting mode.
"Confirm" button	Click	Into menu, user can also use it to confirm the parameter alteration in the setting mode.

Note: After setting or altering a specific parameter, press button. Device will save the entry data and setting or altering will take effect immediately. If need to cancel the current operation, please press ESC button.

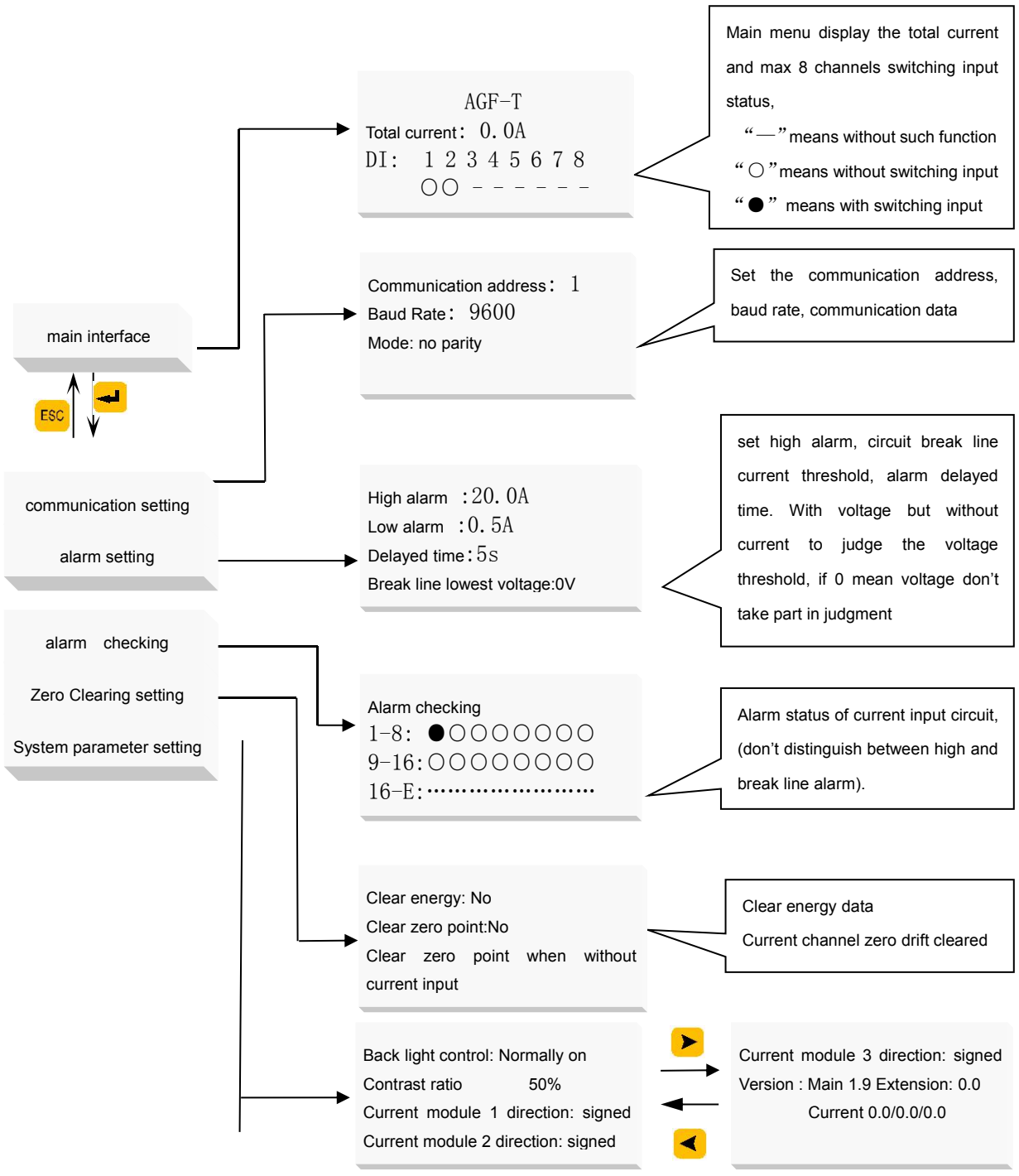

In system parameters setting, the self-control mode for LCD backlight control is "not allowed to set" contrast ratio setting is "allowed to set", and the current direction of confluence acquisition module can be set as absolute value or with a sign. When using absolute value to calculate，it will ignore the actual current direction through the acquisition device，both positive and negative direction current are displayed as positive value. when using a sign to display，it will use the reserved positive current direction as reference，the reverse current direction will be displayed as negative value. The current data of the device communicating with the external equipments also conform to the above regulations.

ADR button to set the address quickly—in main menu interface to click ADR button to enter，press button to alter and save，press or to switch the menu interface.

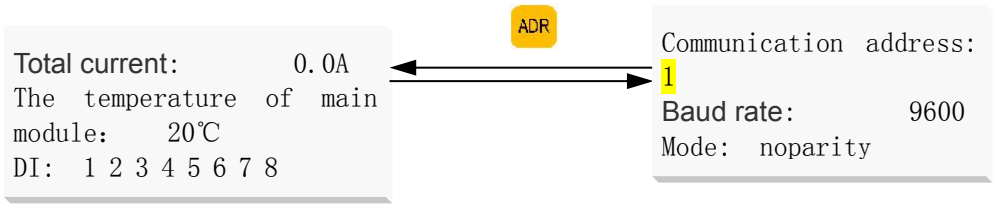

Press forward button to check total current 、voltage、power 、electric energy and branch currents.

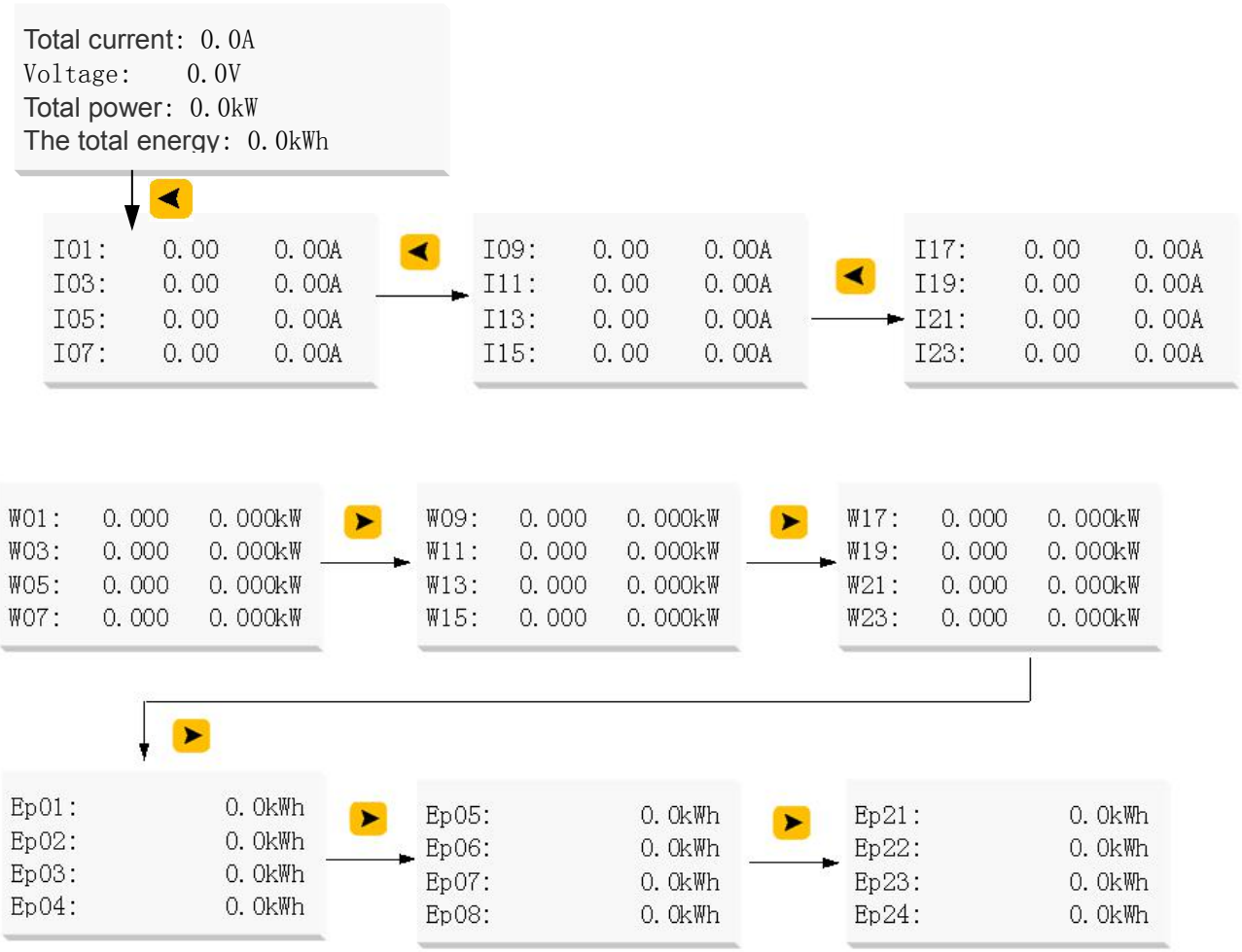

10 Alarm setting

SEL (The way to set alarm): 10 modes in all, please refer to Figure 11 for details.

HiTC (Set-point for temperature alarm): To set a temperature value. when the temperature value tested through a temperature tester is above the set temperature value, relay will operate(?)

HiHU(Set-point for high voltage alarm): To set a voltage value, when the high voltage value is above the

set high voltage value, relay will operate.

dly(To set delay time for temperature alarm): To set delay time for relay operation (when temperature reaches the set value).

Band(over voltage band for no action) Set a value XXXX, when the measured voltage value fluctuates between the set-point of high voltage alarm and the value XXXX which is below set-point of high voltage alarm, relay won't operate(This setting will act after relay operation). For example, setting the high voltage alarm 800V, band 100V, when signal is above 800V, timer is on. When the signal is above 700V, timer for delay time is on. When delay time reaches its set point, alarm is on. When voltage signal is below 700V, alarm will be terminated.

How to use AGF testing software to set time duration for relay output:

Setting output time 0 second, picking up of relay will stay on

Setting output time X(non 0)second, relay will cut off X seconds after picking up. If DO mode is alarm mode

11 Application Project

11.1 Communication connection

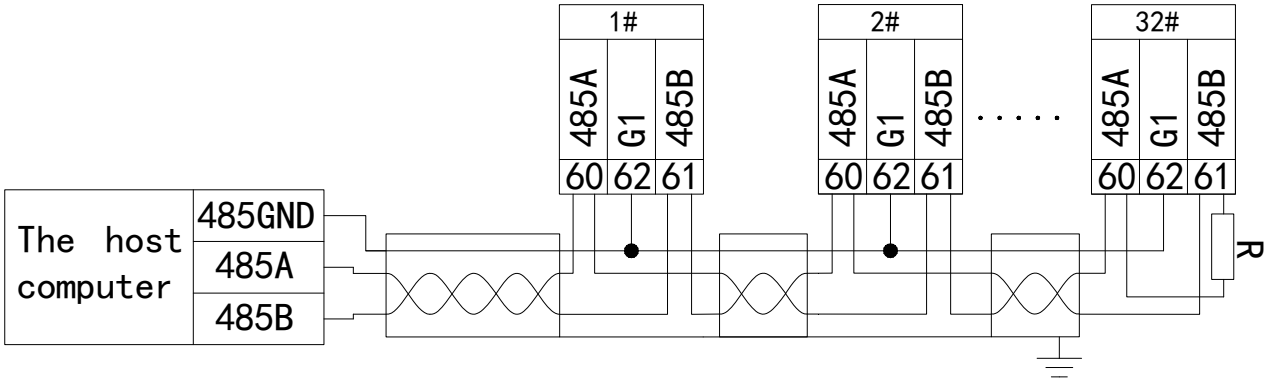

When multiple devices make up a network, A and B connectors of RS485 in the last device should be connected a terminal matching resistor R in a parallel way to ensure it matches communication resistance. Generally terminal matching resistor is between 120Ω-10kΩ.Matching resistor might change as result of different arrangement of wire. The above figure is the schematic for 3-core shielding wire using. Shielding layer is connected with ground and all the G1 terminals connected in parallel way.

11.2 Commissioning and maintenance

11.2.1 Instructions for use

1) Check whether power line is connected correctly before powering on.
2) After powering on, POWER indicator(POWER) will illuminate and RUN indicator(RUN)flashes up for 1 second.
3) Communication set up
   a) Connected with RS485 Bus correctly and connected with upper computer.
   b) Upper computer will send commands in commonly used format according to module's station number and baud. The module's communication indicator flashes up to show that the module has received commands from upper computer and has responded to it. That is to say communication has been set up.
   c)

11.2.2 Testing

1) Check whether power line is connected correctly before powering on.
2) After powering on, check if POWER indicator illuminates. If not, it shows power is not on.
3) Check whether RUN indicator flashes up. If not, it shows the module is not working properly.
4) Only when the communication indicator flashes up does it show communication has been set up.
5) Set query time interval for upper computer. Because BUS is in half-duplex way, upper computer should be allowed proper interval. The time interval should be decided by the time length and baud rate of module response. Improper setting of time interval will cause communication to fail.

12 Communication instruction

12.1 Communication register table

User can visit all the contents in the address table by using Modbus function code 03(03H) and 04(04H), can write single register data by using function code 06(06H), can write consecutive register data by using function code 16(16H).The data addresses in the table are in decimal system. The recorded data in every inner register address is 16bit, namely 1 WORD data.

Address	Data Content	Data Type	Remark	Read / Write
0	The meter identification number	unsigned int	0x1308	R
1	Version	unsigned int	0x1234 mean the version is 12.34	R
2	Address number	unsigned int	Address range 1-247	R/W
3	The communication baud rate	unsigned int	1200,2400,4800,9600,19200,38400	R/W
4	Communication verify mode	unsigned int	0、1、2、3 0：mean 1 stop bit；1：mean 2 stop bits； 2：mean even verify；3：mean odd verify	R/W
5-6 reserve				
7	The inner temperature of power module	High 8 bit	The temperature of from module（signed char）	R
		Low 8 bit	The temperature of master module（signed char）	

8	8-1 channel work condition	unsigned int	bit1，bit0 00=channel uninstalled，indication LED not on 0 1=over current、break line，red LED display 1 0=normal work，green LED display 1 1=current input reverse bit1 and bit 0 of address 8 correspond to 1th channel input condition；bit3，bit2 correspond to 2th channel input condition，others are	R
9	16-9 channel work condition			R
10	16-1 channel alarm condition	unsigned int	Bit0 is for 1th channel，Bit1 is for 2th channel，others are similar.	R
11	Switching input、output condition	unsigned int	Bit0 is for 1th channel DO， Bit1is for 2th channel DO， Bit8 is for 1thchannel DI，Bit9 is for 2th channel DI，Bit10 is for 3th channel DI.0 off, 1 on	R/W
15	Power module DC high voltage input	int	Decimal point 1 digit,unit V(eg.6789 mean 678.9V)	R
15	Total confluence current	int	Decimal point 1 digit,unit A	R
17	Total confluence power	int	Decimal point 1 digit,unit KW	R
18	1th channel input current value	int	Present current input，Decimal point 2 digits，eg.1000 mean 10.00A	R
19	2th channel input current value	int		R
20	3th channel input current value	int		R
	Addr 21 22 23 24 25 26 27 28 29 30 31 32 33	int		R
	channel 4 5 6 7 8 9 10 11 12 13 14 15 16	int		R
		int		R

34	1th input power value	int	Decimal point 3 digits，unit KW. eg.1000 mean power as 1.000KW	R
35	2th input power value			R
36	3th input power value			R
	address 37 38 39 40 41 42 43 44 45 46 47 48 49			R
				R
	channel 4 5 6 7 8 9 10 11 12 13 14 15 16			R
50-68			reserve	
69	Total energy（low byte）	Unsigned long	Write 0 to clear	R/W
70	Total energy（high byte）			R/W
71-79			reserve	
80	Pulse relay 1 output time	unsigned int	The value is not “0”,it means pulse output，automatic reset after the setting time；setting parameter is “0”,remote control will not automatically reset.unit second.	R/W
81	Pulse relay 2 output time	unsigned int		R/W
82	1th channel over current threshold value	unsigned int	Set the over current alarm threshold value，when input current correspond to address 10 to mark alarm，the value including decimal point 2 digits.	R/W
83	2th channel over current threshold value	unsigned int		R/W
84	3th channel over current threshold value	unsigned int		R/W
	address 85 86 87 88 89 90 91 92 93 94 95 96 97	unsigned int		R/W
				R/W

	channel	4	5	6	7	8	9	10	11	12	13	14	15	16			R/W
98	1th channel break line threshold value														unsigned int	without current,the address 10，register correspond to alarm, the value including decimal point 2 digits.	R/W
99	2th channel break line threshold value																R/W
100	3th channel break line threshold value																R/W
	address	101	102	103	104	105	106	107	108	109	110	111	112	113	unsigned int		R/W
	channel	4	5	6	7	8	9	10	11	12	13	14	15	16			R/W
114	1th channel alarm delayed														unsigned int	The alarm mark work after the input signal over the setting threshold value,unit second.	R/W
115	2th channel alarm delayed																R/W
116	3th channel alarm delayed																R/W
	address	117	118	119	120	121	122	123	124	125	126	127	128	129	unsigned int		R/W

| | | |

133	24-17 channel alarm condition	unsigned int	Bit0 and bit1 correspond to 17th channel， Bit3 and bit2 correspond to 18th channel， others are similar	R
134	17th channel input current value	int	Present current input， decimal point 2 digits，eg. 1000 means current as 10.00A.	R
135	18th channel input current value			R
136	19th channel input current value			R
137	20th channel input current value	int		R
138	21th channel input current value			R
139	22th channel input current value			R
140	23th channel input current value			R
141	24th channel input current value			R
142	17th channel input power value	int	Decimal point 3 digits， unit KW.eg.1000 means power is 1.000KW	R
143	18th channel input power value			R
144	19th channel input power value			R
145	20th channel input power value			R
146	21th channel input power value			R
147	22th channel input power value			R
148	23th channel input power value			R
149	24th channel input power value			R
150	1th channel energy（low byte）	Unsigned long	Decimal point 1 digit， unit kWh.eg.1000 means energy is 100.0kWh	R/W
151	1th channel energy（high byte）			
152	2th channel energy（low byte）			
153	2th channel energy（high byte）			
154	3th channel energy（low byte）			
155	3th channel energy（high byte）			

156	4th channel energy（low byte）			
157	4th channel energy（high byte）			
158	5th channel energy（low byte）	Unsigned long	Decimal point 1 digit， unit kWh.eg.1000 means energy is 100.0kWh	R/W
159	5th channel energy（high byte）			
160	6th channel energy（low byte）			
161	6th channel energy（high byte）			
162	7th channel energy（low byte）			
163	7th channel energy（high byte）			
164	8th channel energy（low byte）			
165	8th channel energy（high byte）			
166	9th channel energy（low byte）	Unsigned long		R/W
167	9th channel energy（high byte）			
168	10th channel energy（low byte）			
169	10th channel energy（high byte）			
170	11th channel energy（low byte）			
171	11th channel energy（high byte）			
172	12th channel energy（low byte）			
173	12th channel energy（high byte）			
174	13th channel energy（low byte）			
175	13th channel energy（high byte）			
176	14th channel energy（low byte）			
177	14th channel energy（high byte）			
179	15th channel energy（low byte）			
180	16th channel energy（low byte）			
181	16th channel energy（high byte）			
182	17th channel energy（low byte）			
183	17th channel energy（high byte）			
184	18th channel energy（low byte）	Unsigned long		
185	18th channel energy（high byte）			
186	19th channel energy（low byte）			

187	19th channel energy（high byte）			
188	20th channel energy（low byte）			
189	20th channel energy（high byte）	Unsigned long		R/W
190	21th channel energy（low byte）			
191	21th channel energy（high byte）			
192	22th channel energy（low byte）			
193	22th channel energy（high byte）			
194	23th channel energy（low byte）	Unsigned long		
195	23th channel energy（high byte）			
196	24th channel energy（low byte）	Unsigned long		
197	24th channel energy（high byte）			
198	17th channel over current threshold	Unsigned int	Set the over current alarm threshold value，when input over current respond to address 133 as mark alarm，the value include decimal point 2 digits.	R/W
199	18th channel over current threshold			R/W
200	19th channel over current threshold			R/W
201	20th channel over current threshold			R/W
202	21th channel over current threshold			R/W
203	22th channel over current threshold			R/W
204	23th channel over current threshold			R/W
205	24th channel over current threshold			R/W
206	17th channel break line threshold value	Unsigned int	Set the break line alarm threshold value，when input break line without current respond to address 133 register as mark alarm，the value include decimal point 2 digits.	R/W
207	18th channel break line threshold value			R/W
208	19th channel break line threshold value			R/W
209	20th channel break line threshold value			R/W
210	21th channel break line threshold value			R/W
211	22th channel break line threshold value			R/W
212	23th channel break line threshold value			R/W
213	24th channel break line threshold value			R/W
214	17th channel alarm delayed time	Unsigned int	Signal input more than the setting threshold	R/W
215	18th channel alarm delayed time			R/W

216	19th channel alarm delayed time		value,after the time,the alarm symbol come to work,unit second.	R/W
217	20th channel alarm delayed time			R/W
218	21th channel alarm delayed time	Unsigned int	Signal input more than the setting threshold value,after the time,the alarm symbol come to work,unit second.	R/W
219	22th channel alarm delayed time			R/W
220	23th channel alarm delayed time			R/W
221	24th channel alarm delayed time			R/W
222	24th channel alarm delayed time	Unsigned int	Bit0 module 1，bit1 module 2，bit2 module 3，responding bit is 0 to use the symbol method on behalf of current direction.presuppose the positive current direction,the reverse current display negative.When the bit is 1,it means that the absolute value represent current.This calculation way is to ignore the real direction of current through the acquisition device， both positive and negative current are displayed as positive value.	R/W

12.2 DI state (switching state) access

Use Modbus function code 02 (02H) to read the contents in the following address table.
1=ON, 0=OFF

data address	data contents	data type	R/W	command word	data range
0000H	DI1	BIT	R	02	1=ON,0=OFF
0001H	DI2	BIT	R	02	1=ON,0=OFF
0002H		BIT	R	02	1=ON,0=OFF
...	...	...	...	...	...
0007	DI8	BIT	R	02	1=ON,0=OFF

12.3 DO state(switching output alarm state) access

Use Modbus function code 02 (02H) to read the contents in the following address table.
1=ON, 0=OFF

data address	data contents	data type	R/W	command word	data range
0000H	DO1	BIT	R	01	1=ON,0=OFF
0001H	DO2	BIT	R	01	1=ON,0=OFF

In the remote equipment, using this function code to read alarm state consecutively from 1st to 32nd. The first input of the corresponding alarm address is 0， so alarm address for addressing 1-32 is 0-31.
1=ON(With alarm) 0=OFF(No alarm)

12.4 Switching state output(alarm state)

Use Modbus function code 02 (02H) to read the contents in the following address table .

data address	data contents	R/W	command word	data
0000H	DO1	W	05	0XFF00=ON,0X0000=OFF
0001H	DO2	W	05	0XFF00=ON,0X0000=OFF

12.5 Communication example

Example 1: Read the measured value of 11th way & 12th way in address 1.

Send: 0x01,0x03,0x00,0x1b,0x00,0x02,0xb4,0x0c

Response: 0x01,0x03,0x04,0x03,0xd2,0x02,0x50,0x5b,0x12

Notes: The measurement for 10th circuit(0x03,0xd2) 9.78A, for 11th circuit (0x02,0x50)

5.92A.

Example 2: Set the over-current set-point for the 2nd circuit (supposing the over-current alarm set-point is 11.00, the value will be set as 1100).

Send: 0x01,0x06,0x00,0x53,0x04,0x4c,0x7A,0xEE

Response: 0x01,0x06,0x00,0x53,0x04,0x4c,0x7A,0xEE

Or

Send: 0x01,0x10,0x00,0x53,0x00,0x01,0x02,0x04,0x4c,0xA9,0x06

Response:0x01,0x10,0x00,0x53,0x00,0x01,0xf1,0xd8

Example 3: Read switching input state:

Send: 0x01,0x02,0x00,0x00,0x00,0x03,0x38,0x0B

Response: 0x01,0x02,0x01,0x04,0xA0,0x4B

Notes: The parity of 04 is (00000)100 in binary system, that is the switching input state of the 3rd circuit is ON, others are OFF. The fifth bit is supplemented 0 without meaning.

Example 4: Read switching output state(alarm):

Send: 0X01,0x01,0x00,0x00,0x00,0x02,0xbd,0xcb

Response: 0x01,0x01,0x01,0x02,0xd0,0x49

Notes: The parity of 02 is (00000)10 in binary system, that is the switching input state of the 2nd circuit is ON, others are OFF. The sixth bit is supplemented 0 without meaning.